Installation, Operation, and Maintenance

Precedent™ Packaged Rooftop Units

Cooling and Gas/Electric
Standard and High Efficiency
3 to 25 Tons — 60 Hz

Model Numbers:
TSK036* - TSK300*
THK036* - THK300*
YSK036* - YSK300*
YHK036* - YHK300*

⚠ SAFETY WARNING

Only qualified personnel should install and service the equipment. The installation, starting up, and servicing of heating, ventilating, and air-conditioning equipment can be hazardous and requires specific knowledge and training. Improperly installed, adjusted or altered equipment by an unqualified person could result in death or serious injury. When working on the equipment, observe all precautions in the literature and on the tags, stickers, and labels that are attached to the equipment.

February 2025 **RT-SVX092C-EN**

Introduction

Read this manual thoroughly before operating or servicing this unit.

Warnings, Cautions, and Notices

Safety advisories appear throughout this manual as required. Your personal safety and the proper operation of this machine depend upon the strict observance of these precautions.

The three types of advisories are defined as follows:

⚠ WARNING	Indicates a potentially hazardous situation which, if not avoided, could result in death or serious injury.
⚠ CAUTION	Indicates a potentially hazardous situation which, if not avoided, could result in minor or moderate injury. It could also be used to alert against unsafe practices.
NOTICE	Indicates a situation that could result in equipment or property-damage only accidents.

Important Environmental Concerns

Scientific research has shown that certain man-made chemicals can affect the earth's naturally occurring stratospheric ozone layer when released to the atmosphere. In particular, several of the identified chemicals that may affect the ozone layer are refrigerants that contain Chlorine, Fluorine and Carbon (CFCs) and those containing Hydrogen, Chlorine, Fluorine and Carbon (HCFCs). Not all refrigerants containing these compounds have the same potential impact to the environment. Trane advocates the responsible handling of all refrigerants.

Important Responsible Refrigerant Practices

Trane believes that responsible refrigerant practices are important to the environment, our customers, and the air conditioning industry. All technicians who handle refrigerants must be certified according to local rules. For the USA, the Federal Clean Air Act (Section 608) sets forth the requirements for handling, reclaiming, recovering and recycling of certain refrigerants and the equipment that is used in these service procedures. In addition, some states or municipalities may have additional requirements that must also be adhered to for responsible management of refrigerants. Know the applicable laws and follow them.

⚠ WARNING

Proper Field Wiring and Grounding Required!

Failure to follow code could result in death or serious injury.

All field wiring MUST be performed by qualified personnel. Improperly installed and grounded field wiring poses FIRE and ELECTROCUTION hazards. To avoid these hazards, you MUST follow requirements for field wiring installation and grounding as described in NEC and your local/state/national electrical codes.

⚠ WARNING

Personal Protective Equipment (PPE) Required!

Failure to wear proper PPE for the job being undertaken could result in death or serious injury.

Technicians, in order to protect themselves from potential electrical, mechanical, and chemical hazards, MUST follow precautions in this manual and on the tags, stickers, and labels, as well as the instructions below:

- **Before installing/servicing this unit, technicians MUST put on all PPE required for the work being undertaken (Examples; cut resistant gloves/ sleeves, butyl gloves, safety glasses, hard hat/ bump cap, fall protection, electrical PPE and arc flash clothing). ALWAYS refer to appropriate Safety Data Sheets (SDS) and OSHA guidelines for proper PPE.**
- **When working with or around hazardous chemicals, ALWAYS refer to the appropriate SDS and OSHA/GHS (Global Harmonized System of Classification and Labelling of Chemicals) guidelines for information on allowable personal exposure levels, proper respiratory protection and handling instructions.**
- **If there is a risk of energized electrical contact, arc, or flash, technicians MUST put on all PPE in accordance with OSHA, NFPA 70E, or other country-specific requirements for arc flash protection, PRIOR to servicing the unit. NEVER PERFORM ANY SWITCHING, DISCONNECTING, OR VOLTAGE TESTING WITHOUT PROPER ELECTRICAL PPE AND ARC FLASH CLOTHING. ENSURE ELECTRICAL METERS AND EQUIPMENT ARE PROPERLY RATED FOR INTENDED VOLTAGE.**

⚠ WARNING

Follow EHS Policies!

Failure to follow instructions below could result in death or serious injury.

- **All Trane personnel must follow the company's Environmental, Health and Safety (EHS) policies when performing work such as hot work, electrical, fall protection, lockout/tagout, refrigerant handling, etc. Where local regulations are more stringent than these policies, those regulations supersede these policies.**
- **Non-Trane personnel should always follow local regulations.**

⚠ WARNING

R-454B Flammable A2L Refrigerant!

Failure to use proper equipment or components as described below could result in equipment failure, and possibly fire, which could result in death, serious injury, or equipment damage.
The equipment described in this manual uses R-454B refrigerant which is flammable (A2L). Use ONLY R-454B rated service equipment and components. For specific handling concerns with R-454B, contact your local representative.

Copyright

This document and the information in it are the property of Trane, and may not be used or reproduced in whole or in part without written permission. Trane reserves the right to revise this publication at any time, and to make changes to its content without obligation to notify any person of such revision or change.

Trademarks

All trademarks referenced in this document are the trademarks of their respective owners.

Product Safety Information

This appliance is not intended for use by persons (including children) with reduced physical, sensory or mental capabilities, or lack of experience and knowledge, unless they have been given supervision or instruction concerning use of the appliance by a person responsible for their safety. Children should be supervised to ensure that they do not play with the appliance.

Maximum altitude of use 3000 meters.

This appliance incorporates an earth connection for functional purposes only.

Revision History

Updated A2L chapter.

Table of Contents

Model Number Description 6

General Information 8

Unit Inspection 8

Exterior Inspection 8

Inspection for Concealed Damage. 8

Unit Storage 8

Unit Description 8

Door Handles 8

Unit Nameplate. 8

Compressor Nameplate 9

Microchannel Coil Barcode ID 9

LonTalk Communication Interface (Optional). 9

BACnet and Modbus Communications Interface (Optional) 9

System Input Devices and Functions 9

Supply Fan Failure 9

5-Tap Direct Drive Indoor Fan. 9

Clogged Filter Switch (Optional). 9

Condensate Drain Pan Overflow Switch 9

Low Pressure Control (LPC) 10

High Pressure Control (HPC). 10

Air Filters 10

Zone Sensors 10

Manual Changeover (BAYSENS106*) 10

Manual/Automatic Changeover (BAYSENS108*) 10

Wall Mounted Relative Humidity Sensor (BAYSENS036*) 11

Duct Mounted Relative Humidity Sensor (BAYSENS037*) 11

Integrated Comfort System (BAYSENS073*) 11

Integrated Comfort System (BAYSENS074*) 11

Remote Zone Sensor (BAYSENS016*) 11

Remote Zone Sensor (BAYSENS077*) 11

Thermostat. 11

High Temperature Sensor (FIAHTST001*) 11

Digital Display Zone Sensor (BAYSENS135*) 12

Touch Screen Programmable Zone Sensor (BAYSENS800) 12

Evaporator Frost Control. 12

Discharge Line Temp Switch (DLT) 12

Smoke Detector Sensor (Optional) 12

Phase Monitor 12

Pre-Installation 13

Dimensions and Weights. 14

Cabinet Size 14

Dimensional Data. 14

Clearances 31

Weights 31

Lifting and Rigging 34

A2L Information and Installation Requirements 35

Installation/Code Compliance Requirements 35

A2L Work Procedures 35

Servicing 35

Leak Detection 36

Refrigerant Removal and Evacuation 36

Refrigerant Charging 37

Decommissioning 37

A2L Application Considerations. 37

Ignition Sources in Ductwork. 38

Ignition Sources in Unit 38

Minimum Room Area Limits (Refrigerant charge greater than 3.91 lb per circuit) 38

Leak Detection System (Refrigerant charge greater than 3.91 lb per circuit) 40

Installation 41

Horizontal Units 41

Ductwork 41

Roof Curb 45

Downflow 45

Rigging. 46

General Unit Requirements 47

Factory Installed Economizer 47

External Vent Hood Installation. 47

Horizontal Discharge Conversion (A.0 Cabinet Units). 48

Horizontal Discharge Conversion (B.0 and C.0 Cabinet Units) 48

Horizontal Discharge Conversion (D.0 and D.1 Cabinet Units) 49

DAS Horizontal Conversions (Select Modulating Gas Heat Units) 49
6 Ton Low Modulating Gas Heat 49
6 Ton High Modulating Gas Heat and 7.5 to 12 Ton All Modulating Gas Heat 50
B Cabinet 3 to 5 Ton Standard and High Efficiency Heat Pump 51
B Cabinet 3 to 5 Ton High Efficiency Heat Pump Units with the Ultra-Low NOx Gas Furnace Option 51
TCO1 Instructions 52
Return Air Smoke Detector 53
A.0, B.0, and C.0 Cabinet Units 53
D.0 and D.1 Cabinet Units 53
Air-Fi® Wireless Communication Interface 54
Main Electrical Power Requirements 55
Electric Heat Requirements 55
Low Voltage Wiring 55
Through-the-Base Gas Installation 55
Requirements of Gas Heat 57
Modulating Gas Heat 57
Condensate Drain Configuration 58
Drain Pan Removal (Units with Condensate Overflow Switch Option) 59
Furnace Condensate Drain 59
Filter Installation 59
Outdoor Motor Controllers 59
Field Installed Power Wiring 60
Main Unit Power 60
Standard Wiring 60
Optional TBUE Wiring (Through-the-Base Electrical Option) 60
Field-Installed Control Wiring 61
Control Power Transformer 61
Controls using 24 Vac 61
Controls using DC Analog Input/Outputs (Standard Low Voltage Multi conductor Wire) 62
DC Conductors 63
Space Temperature Averaging 63
Pre-Start 66
Voltage Imbalance 66
Electrical Phasing (Three Phase Motors) 67
Compressor Crankcase Heaters 67
Symbio Controls 68
Unit Start-Up 69
Sequence of Operation 69
Ignition Module – Two-stage 69
Ignition Module – Modulating Gas 69
Call for Heat 69
Ignition and Operational Failures During a Call for Heat 70
Recovery from Lockout (E Code) 70
Return Air Smoke Detector 71
Compressor Start-Up 71
Hot Gas Reheat 72
Final System Setup 72
Maintenance 73
Annual Maintenance 73
Monthly Maintenance 73
Filters 73
Return Air Smoke Detector 73
Condensate Overflow Switch 73
Cooling Season 73
Heating Season 73
Coil Cleaning 74
Microchannel (MCHE) Coils 74
Final Process 75
Troubleshooting 76
Wiring Diagrams 77
Piping Diagrams 82
Gas Heat Operation and Maintenance 88
Gas Heat Unit General Information 88
Heating System 88
Heating Cycle Operation 88
Safety Controls 89
Heating System Start-Up 89
Heating System Shutdown 89
Turning Off Gas to Unit 90
Heating System Maintenance 90
Limited Warranty 91
Electric Air Conditioner 91
Precedent (Models TSK, THK, YSK, YHK) 91

Model Number Description

Digit 1 — Unit Function

T = DX Cooling
Y = DX Cooling, Gas Heat

Digit 2 — Cooling Efficiency

S = Standard Efficiency
H = High Efficiency

Digit 3 — Refrigerant

K = R-454B

Digit 4,5,6 — Nominal Gross Cooling Capacity (MBh)

036 = 3 Ton
048 = 4 Ton
060 = 5 Ton
072 = 6 Ton
090 = 7.5 Ton
102 = 8.5 Ton
120 = 10 Ton
150 = 12.5 Ton
180 = 15 Ton
210 = 17.5 Ton
240 = 20 Ton
300 = 25 Ton

Digit 7 — Design Sequence

Digit 8 — Voltage Selection

3 = 208–230/60/3
4 = 460/60/3
W = 575/60/3

Digit 9 — Unit Controls

S = Symbio™ 700

Digit 10 — Heat Type

0 = Base Model
A = Stainless Steel Gas Heat
B = Modulating Gas Heat

Digit 11 — Heating Capacity

0 = No Heat
B = 6 kW Electric Heat
C = 9 kW Electric Heat
E = 12 kW Electric Heat
G = 18 kW Electric Heat
J = 23 kW Electric Heat
K = 27 kW Electric Heat
N = 36 kW Electric Heat
P = 54 kW Electric Heat
R = 72 kW Electric Heat
L = Low Gas Heat
M = Medium Gas Heat
H = High Gas Heat

Digit 12, 13 — Service Sequence

****** = Factory Assigned

Digit 14 — Fresh Air Selection

0 = No Fresh Air
A = Manual Outside Air Damper 0–50%
B = Motorized Outside Air Damper 0–50%
C = Economizer, Dry Bulb 0–100% without Barometric Relief
D = Economizer, Dry Bulb 0–100% with Barometric Relief
E = Economizer, Reference Enthalpy 0–100% without Barometric Relief
F = Economizer, Reference Enthalpy 0–100% with Barometric Relief
G = Economizer, Comparative Enthalpy 0–100% without Barometric Relief
H = Economizer, Comparative Enthalpy 0–100% with Barometric Relief
K = Downflow Low Leak Economizer, Dry Bulb with Barometric Relief
M = Downflow Low Leak Economizer, Reference Enthalpy with Barometric Relief
P = Downflow Low Leak Economizer, Comparative Enthalpy with Barometric Relief
R= Downflow Low Leak Economizer, Differential Dry Bulb with Barometric Relief

Digit 15 — Supply Fan/Drive Type/Motor

0 = Multi-Speed Motor
1 = Optional High Static Motor
2 = Single Zone Variable Air Volume with Standard Motor
3 = Single Zone Variable Air Volume with Oversized/High Static Motor
4 = Multiple Zone Variable Air Volume with Standard Motor
5 = Multiple Zone Variable Air Volume with Oversized/High Static Motor

Digit 16 — Hinged Access/Filters

0 = Standard Panels/Standard Filters
A = Hinged Access Panels/Standard Filters
B = Standard Panels/2 inch MERV 8 Filters
C = Hinged Access Panels/2 inch MERV 8 Filters
D = Standard Panels/2 inch MERV 13 Filters
E = Hinged Access Panels/2 inch MERV 13 Filters

Digit 17 — Condenser Coil Protection

0 = Standard Coil
1 = Condenser with CompleteCoat™

Digit 18 — Through-the-Base Provisions

0 = No Through-the-Base Provisions
A = Through-the-Base Electric
B = Through-the-Base Gas Piping
C = Through-the-Base Electric and Gas Piping

Digit 19 — Disconnect/Circuit Breaker (three-phase only)

0 = No Disconnect/No Circuit Breaker
1 = Unit Mounted/Non-Fused Disconnect
2 = Unit Mounted Circuit Breaker

Digit 20 — Convenience Outlet

0 = No Convenience Outlet
A = Unpowered 20A Convenience Outlet
B = Powered 15A Convenience Outlet

Digit 21 — Communications Options

0 = No Communications Interface
1 = Advanced Controller with BACnet® Communications Interface
2 = Advanced Controller with LonTalk® Communications Interface
3 = Advanced Controller with Air-Fi® Communications Interface

Digit 22 — Refrigeration System Option

0 = Standard Refrigeration System
A = Humidity Control Option

Digit 23 — Controls Expansion Module

0 = None
1 = XM-30 Expansion Module
2 = XM-32 Expansion Module
3 = XM-30 and XM-32 Expansion Module
4 = XM–30 Expansion Module (Qty 2)
5 = XM–32 Expansion Module (Qty 2)

Digit 24 — Smoke Detector

0 = No Smoke Detector
A = Return Air Smoke Detector
B = Supply Air Smoke Detector
C = Supply and Return Air Smoke Detectors

Digit 25 — System Monitoring Controls

0 = No Monitoring Control
1 = Clogged Filter Switch
2 = Condensate Overflow Switch
3 = Discharge Air Sensing Tube
4 = Clogged Filter Switch and Condensate Overflow Switch
5 = Clogged Filter Switch and Discharge Air Sensing Tube
6 = Condensate Overflow Switch and Discharge Air Sensing Tube
7 = Clogged Filter Switch, Condensate Overflow Switch and Discharge Air Sensing Tube

Digit 26 — Not Used

Digit 27 — Unit Hardware Enhancements

0 = No Enhancements
1 = Stainless Steel Drain Pan

Digit 28 — Short Circuit Current Rating

0 = Standard (5k) SCCR Marking
A = Tier 2 (65K) SCCR Marking

Digit 29 — Low Ambient

0 = None
A = Low Ambient Cooling to 0°F

General Information

Unit Inspection

To protect against loss due to damage incurred in transit, perform inspection immediately upon receipt of the unit. Check carefully for shipping damage. If any damage is found, report it immediately, and file a claim against the transportation company.

Exterior Inspection

If the job site inspection reveals damage or material shortages, file a claim with the carrier immediately. Specify the type and extent of the damage on the bill of lading before signing. Notify the appropriate sales representative.

Important: *Do not proceed with installation of a damaged unit without sales representative approval.*

- Inspect the complete exterior for signs of shipping damages to unit or packing material.
- Verify that the nameplate data matches the sales order and bill of lading.
- Verify that the unit is properly equipped and there are no material shortages.
- Verify the power supply complies with the unit nameplate specifications.

Inspection for Concealed Damage

Inspect the components for concealed damage as soon as possible after delivery and before it is stored.

If concealed damage is discovered:

- Notify the carrier's terminal of the damage immediately by phone and by mail.
- Concealed damage must be reported within 15 days.
- Request an immediate, joint inspection of the damage with the carrier and consignee.
- Stop unpacking the unit.
- Do not remove damaged material from receiving location.
- Take photos of the damage, if possible.
- The owner must provide reasonable evidence that the damage did not occur after delivery.

Unit Storage

Take precautions to prevent condensate from forming inside the unit's electrical compartments and motors if:

- The unit is stored before it is installed; or,
- The unit is set on the roof curb, and temporary heat is provided in the building. Isolate all side panel service entrances and base pan openings (e.g., conduit holes, S/A and R/ A openings, and flue openings) from the ambient air until the unit is ready for start-up.

Note: *Do not use the unit heater for temporary heat without first completing the start-up.*

The manufacturer will not assume any responsibility for equipment damage resulting from condensate accumulation on the unit electrical and/or mechanical components.

Unit Description

- Before shipment, each unit is leak tested, dehydrated, charged with refrigerant and compressor oil, and run tested for proper control operation.
- The condenser coils are all aluminum microchannel.
- Direct-drive, vertical discharge condenser fans are provided with built-in thermal overload protection.
- All units come with standard Symbio™ 700 control system with advanced diagnostics.

Door Handles

Door handles rotate 180 degrees for use on either left- or right-handed doors. Handles will be in the vertical position when latched, as shown in the following figure. After each use, return door handles to the latched and locked position..

Figure 1. Door handles

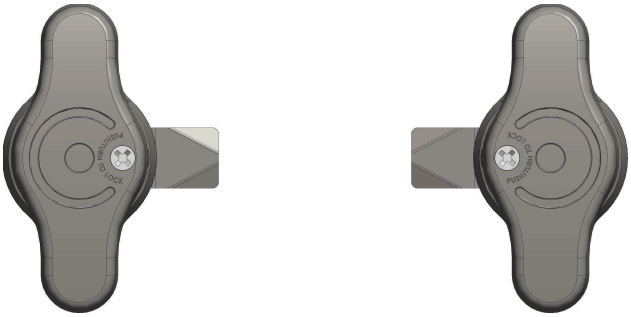

To lock:

1. Verify handle is in the vertical (latched) position.
2. Using a Phillips head screwdriver, push and rotate the handle screw clockwise 1/4 turn.

To unlock:

Use a Phillps head screwdriver to push and rotate handle screw counterclockwise 1/4 turn.

Unit Nameplate

The unit nameplate is located on the unit corner support next to the filter access panel. It includes the unit model number, serial number, electrical characteristics, refrigerant charge, and other pertinent unit data.

Compressor Nameplate

The nameplate for the compressors are located on the side of the compressor.

Microchannel Coil Barcode ID

Barcode decal used for coil part identification can be located on the header and top of coil's inlet/outlet side.

LonTalk Communication Interface (Optional)

The Symbio™ controllers supports communication with LonTalk® open protocol applications. An advanced license is required to enable this feature. The LonTalk module is available factory supplied or as a field-installed kit. For more details, refer to *LonTalk® Integration to Precedent™ Packaged Rooftop Air-Conditioners and Axiom™ Water Source Heat Pumps with Symbio™ 700 Controls Integration Guide* (BAS-SVP063*-EN).

BACnet and Modbus Communications Interface (Optional)

The Symbio™ controller provides integrated communication with BACnet® or Modbus™ open protocol applications. An advanced license is required to enable this feature. When enabled, the following selections are available: BACnet MS/TP, BACnet IP, BACnet Zigbee® (Air-Fi®), Modbus TCP, or Modbus RTU. For more details, refer to *BACnet® and Modbus™ Integration Precedent™ Packaged Rooftop Air Conditioners and Axiom™ Water Source Heat Pumps with Symbio™ 700 Controls Integration Guide* (BAS-SVP062*-EN).

System Input Devices and Functions

The Symbio™ 700 controller requires a zone sensor or thermostat input to operate the unit in a CVZT or VVZT configuration.

Note: *Use of a conventional thermostat will reduce unit functionality.*

The number of available modes depends on the type of zone sensor or thermostat selected. Descriptions of the basic input devices used with the Symbio 700 network are provided to acquaint the operator with the various modules. Refer to the unit schematic for specific module connections. The following controls are available from the factory for field installation.

Supply Fan Failure

Supply fan proving is active when the supply fan is commanded **ON**. The supply fan speed must be greater than 30 rpm for 40 continuous seconds. If the supply fan speed falls below 30 rpm, supply fan failure diagnostic is generated, and operation is stopped.

5-Tap Direct Drive Indoor Fan

Standard efficiency, 3 to 5 ton units are equipped with a 5-speed tap indoor motor.

The motor is factory-wired based on unit configuration:

- Cooling and electric heat units: Wired to operate on speed tap 1 in the cooling and heating mode
- Gas units: Wired to operate on Speed tap 1 for cooling mode Speed tap 4 (minimum) for heating mode

A separate tap terminal is provided to change speeds automatically between heating and cooling modes. The motor can be rewired for various speed settings as required for the application. See the wiring diagram shipped with the unit, and the unit fan performance tables in the catalog.

Clogged Filter Switch (Optional)

The unit mounted clogged filter switch monitors the pressure differential across the return air filters. It is mounted in the filter section and is connected to the Fresh Air Options Module. A diagnostic signal is sent to the controller if the pressure differential across the filters is at least 0.5 inch w.c. The contacts will automatically open when the pressure differential across the filters decreases to approximately 0.4 inch w.c. The clogged filter output is energized when the supply fan is operating and the clogged filter switch has been closed for at least 2 minutes. The system will continue to operate regardless of the status of the filter switch. For further details, see *Clogged Filter Switch Installation Instructions* (ACC-SVN238*-EN).

Note: *On units equipped with factory installed MERV 13 filters, a clogged filter switch with different pressure settings will be installed. This switch will close when the differential pressure is approximately 0.8 inch w.c. and open when the differential falls to 0.7 inch w.c.*

Condensate Drain Pan Overflow Switch

A condensate overflow condition will be detected by a condensate overflow float switch. When the condensate level reaches the trip point, the diagnostic condition will be detected. When the condensate overflow input **closes** for six continuous seconds, the following actions will be taken by the Symbio™ 700 controls:

- An auto-reset diagnostic will be generated. All compressor or heating operations will be disabled immediately. Condenser fans and compressors will be de-energized. Supply fan operation will be shutdown.
- Once the overflow condition has been cleared and the input is **open** for 6 seconds, all diagnostic conditions will be cleared. The unit will return to normal operation. Auto-reset clearing will occur twice each time the unit is powered up. On the third occurrence, the unit will initiate a lock-out and require manual reset. If an auto-reset overflow occurs once, but does not occur again

for 72 hours, the trip counter will reset allowing more auto-resets to occur.

Low Pressure Control (LPC)

When the LPC is opened for 1 continuous second, the compressors for that circuit is turned **OFF**. The compressors will not be allowed to restart for a minimum of 3 minutes.

If four consecutive open conditions occur during an active call for cooling, the compressors will be locked out, a diagnostic generated, if applicable, and a manual reset required to restart the compressors.

High Pressure Control (HPC)

The high pressure controls are wired in series between the compressor outputs on the Symbio™ controller and the compressor contactor coils. If the high pressure control switch opens, the controller senses a lack of current while calling for cooling and locks the compressors out.

If four consecutive open conditions occur during an active call for cooling, the compressors will be locked out, a diagnostic generated, if applicable, and a manual reset required to restart the compressors.

Air Filters

Filters are to be used with this unit. Units ship from the factory with filters installed.

Figure 2. Gas unit overview

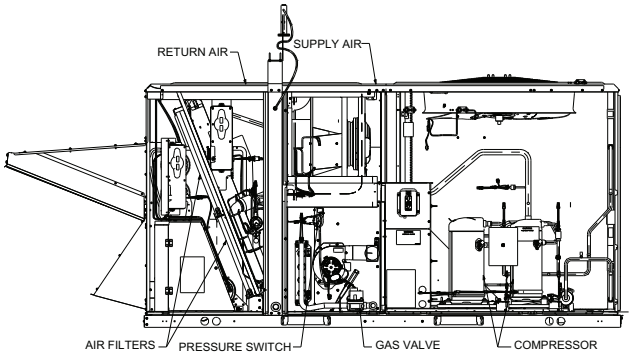

It is very important to keep the central duct system air filters clean. Inspect them at least once each month when the system is in constant operation. (In new buildings, check the filters every week for the first four weeks.) See the following table for the required filter size(s).

If the unit has disposable type filters, replace them with new filters of the same type and size. Do not attempt to clean disposable filters.

Permanent type filters can be cleaned by washing them with a mild detergent and water. Confirm the filters are thoroughly dry before reinstalling them in the unit (or duct system).

It may be necessary to replace permanent filters annually if washing fails to clean the filter. Use the same type and size as originally installed.

Table 1. Recommended standard filters

Tons	Unit Model Number	Qty	Filter Size (L x W xD)
3	(T,Y)(S,H)K036***(0,A)(L,M,H)	4	20 x 20 x 2
4	(T,Y)SK048***(0,A)(L,M,H)	4	20 x 20 x 2
	(T,Y)HK048***(0,A)(L,M,H)	2	18 x 24 x 2
		3	24 x 16 x 2
5	(T,Y)SK060***(0,A)(L,M,H)	4	20 x 20 x 2
	(T,Y)HK060***(0,A)(L,M,H)	2	18 x 24 x 2
		3	24 x 16 x 2
6	(T,Y)(S,H)K072***(0,A,B)(L,M,H)	2	18 x 24 x 2
		3	24 x 16 x 2
7.5	(T,Y)(S,H)K090***(0,A,B)(L,M,H)	2	18 x 24 x 2
		3	24 x 16 x 2
8.5	(T,Y)(S,H)K102***(0,A,B)(L,M,H)	2	18 x 24 x 2
		3	24 x 16 x 2
10	(T,Y)(S,H)K120***(0,A,B)(L,M,H)	2	18 x 24 x 2
		3	24 x 16 x 2
12.5	(T,Y)SK150***(0,A,B)(L,M,H)	3	18 x 18 x 2
		3	24 x 18 x 2
	(T,Y)HK150***(0,A,B)(L,M,H)	8	20 x 24 x 2
15	(T,Y)(S,H)K180***(0,A,B)(L,M,H)	8	20 x 24 x 2
17.5	(T,Y)(S,H)K210***(0,A,B)(L,M,H)	8	20 x 24 x 2
20	(T,Y)(S,H)K240***(0,A,B)(L,M,H)	8	20 x 24 x 2
25	(T,Y)(S,H)K300***(0,A,B)(L,M,H)	8	20 x 24 x 2

Zone Sensors

Manual Changeover (BAYSENS106*)

This sensor features three system switch settings (Heat, Cool, and Off) and two fan settings (On and Auto). It is a manual changeover control with single setpoint.

Manual/Automatic Changeover (BAYSENS108*)

This sensor features four system switch settings (Heat, Cool, Auto, and Off) and two fan settings (On and Auto). It is a manual or auto changeover control with dual setpoint capability. It can be used with a remote zone temperature sensor BAYSENS077*.

Wall Mounted Relative Humidity Sensor (BAYSENS036*)

Field installed, wall mounted humidity sensor that measures temperature and relative humidity. Relative humidity input is used to control activation of dehumidification

Duct Mounted Relative Humidity Sensor (BAYSENS037*)

Field installed, duct mounted humidity sensor that measures temperature and relative humidity. Relative humidity input is used to control activation of dehumidification.

Integrated Comfort System (BAYSENS073*)

This sensor features remote zone sensing and timed override with override cancellation. It is used with a Trane Integrated Comfort™ building management system.

Integrated Comfort System (BAYSENS074*)

This sensor features single setpoint capability and timed override with override cancellation. It is used with a Trane Integrated Comfort™ building management system.

Remote Zone Sensor (BAYSENS016*)

This bullet type temperature sensor can be used for outside air (ambient) sensing, return air temperature sensing, supply air temperature sensing, remote temperature sensing (uncovered). Wiring procedures vary according to the particular application and equipment involved. Refer to the unit's wiring diagrams for proper connections.

Remote Zone Sensor (BAYSENS077*)

This sensor can be used with BAYSENS106*, 108*, 110*, 800* Remote Panels. When this sensor is wired to a BAYSENS800* Remote Panel, wiring must be 18 AWG Shielded Twisted Pair (Belden 8760 or equivalent). Refer to the specific Remote Panel for wiring details.

Thermostat

Room thermostats are delicate temperature sensing controls. Their main function is to energize and de-energize the heating or cooling circuit to maintain the temperature setting you select.

Many thermostats contain a room thermometer to indicate the approximate room temperature and a temperature scale at the adjustment indicator to select the desired indoor air temperature. In addition, most thermostats have a selector mode switch with Heat, Off and Cool positions and a fan switch with On and Off positions.

When the switch is positioned at Off your unit will not operate in either the heat or cool modes. If the selector switch is set at Heat the unit will automatically cycle on and off to maintain the desired temperature setting. The unit will also operate automatically when the selector switch is positioned at Cool.

The fan selector switch can be used to operate the indoor fan continuously by positioning it at On. When set to Auto the fan will only operate when required during the heating or cooling cycles.

The thermostat must be level and positioned to avoid the influence of such external heat sources as lamps, televisions, or other heat producing appliances.

Notes:

- *Single zone VAV is designed to be used with a zone sensor. If a unit is configured for Single zone VAV operation but is connected to a thermostat, the control will revert to multi-speed (2-speed) indoor fan control and staged compressor control. This drastically reduces the energy savings available with this design.*
- *eFlex™ is designed to be used with a zone sensor. If a unit is configured for variable speed compressor operation but is connected to a thermostat, the control will revert to multi-speed indoor fan control and staged compressor control. This drastically reduces the energy savings available with this design.*

The unit must have a thermostat to operate.

- BAYSTAT150

  Three Heat/Two Cool Auto changeover digital display thermostat. Seven day programmable thermostat with night setback.

- BAYSTAT152

  Thermostat, programmable, touch screen, Three Heat/Two Cool Auto changeover digital display thermostat. Seven day programmable thermostat with night setback.

- BAYSTAT814

  Smart Thermostat, programmable, touch screen, Three Heat/Two Cool Auto changeover digital display thermostat. Seven day programmable thermostat with night setback and Time Override. Can be stand alone or multi-thermosets managed by mobile app.

High Temperature Sensor (FIAHTST001*)

This sensor connects to the Symbio™ 700 Emergency Stop Input and provides high limit "shutdown" of the unit. The sensor is used to detect high temperatures due to a high thermal event in the air conditioning or ventilation ducts. The sensor is designed to mount directly to the sheet metal duct. Each kit contains two sensors. The return air duct sensor (X13100040010) is set to open at 135ºF. The supply air duct sensor (X13100040020) is set to open at 240ºF. The control can be reset after the temperature has been lowered approximately 25ºF below the cutout setpoint.

Digital Display Zone Sensor (BAYSENS135*)

LCD display provides heat, cool, auto, on, and off status. Display includes two temperature setpoints, and a lockable setting with °F or °C indicators.

Touch Screen Programmable Zone Sensor (BAYSENS800)

This sensor uses a BACnet® MS/TP link to communicate zone temperature and setpoints. Sensor includes Auto, Heat, Cool, or Off system switch, as well as Fan Auto or On switch. This is a seven day programmable thermostat with night setback.

Notes:

- *Not compatible with VAV units.*
- *Requires BACnet® communications.*
- *For additional sensors, refer to the product catalog.*
- *BAYSENS800* with BACnet® enabled on the Symbio™ controller will report fault detection and diagnostics at the zone sensor. This functionality is only applicable if the customer does not have a building management system, and the unit is running standalone with the BAYSENS800.*

Evaporator Frost Control

Frostat is standard on all units.

Discharge Line Temp Switch (DLT)

The DLT is looped in series with HPC and LPC. It prevents the compressor from overheating.

Smoke Detector Sensor (Optional)

This sensor provides high limit shutdown of the unit and requires a manual reset. The sensor is used to detect smoke in the air conditioning or ventilation ducts.

Notes:

- *The supply air smoke detector samples supply air. The return smoke detectors sample return air. The smoke detectors are designed to shut off the unit if smoke is sensed. This function is performed by sampling the airflow entering the unit at the return air opening. Follow the instructions provided below to confirm that the airflow through the unit is sufficient for adequate sampling. Failure to follow these instructions will prevent the smoke detectors from performing its design function.*
- *Airflow through the unit is affected by the amount of dirt and debris accumulated on the indoor coil and filters. To confirm that airflow through the unit is adequate for proper sampling by the return air smoke detector, complete adherence to the maintenance procedures, including recommended intervals between filter changes, and coil cleaning is required.*
- *Periodic checks and maintenance procedures must be performed on the smoke detector to verify that it will function properly. For detailed instructions concerning these checks and procedures, refer to the appropriate section(s) of the smoke detector Installation and Maintenance Instructions provided with the literature package for this unit.*
- *For the supply air smoke detector or return air smoke detector to properly sense smoke in the supply air stream or return air stream, the air velocity entering the smoke detector unit must be between 500 and 4000 feet per minute. Equipment covered in this manual will develop an airflow velocity that falls within these limits over the entire airflow range specified in the evaporator fan performance tables.*

Phase Monitor

This sensor monitors the voltage between the three conductors of the 3-phase power supply. Two LED lights are provided:

- The green light indicates that a balanced 3-phase supply circuit is properly connected.
- The red light indicates that unit operation has been prevented. There are two conditions that will prevent unit operation:
  - The power supply circuit is not balanced with the proper phase sequence of L1, L2, L3 for the three conductors of a three phase circuit.
  - The line to line voltage is not between 180 volts and 633 volts.

Pre-Installation

⚠ WARNING

Fiberglass Wool!

Exposure to glass wool fibers without all necessary PPE equipment could result in cancer, respiratory, skin or eye irritation, which could result in death or serious injury. Disturbing the insulation in this product during installation, maintenance or repair will expose you to airborne particles of glass wool fibers and ceramic fibers known to the state of California to cause cancer through inhalation.

You MUST wear all necessary Personal Protective Equipment (PPE) including gloves, eye protection, a NIOSH approved dust/mist respirator, long sleeves and pants when working with products containing fiberglass wool.

Precautionary Measures:

- **Avoid breathing fiberglass dust.**
- **Use a NIOSH approved dust/mist respirator.**
- **Avoid contact with the skin or eyes. Wear long-sleeved, loose-fitting clothing, gloves, and eye protection.**
- **Wash clothes separately from other clothing; rinse washer thoroughly.**
- **Operations such as sawing, blowing, tear-out, and spraying may generate fiber concentrations requiring additional respiratory protection. Use the appropriate NIOSH approved respirator.**

First Aid Measures:

- **Eye Contact - Flush eyes with water to remove dust. If symptoms persist, seek medical attention.**
- **Skin Contact - Wash affected areas gently with soap and warm water after handling.**

Dimensions and Weights

Cabinet Size

Table 2. Cabinet size — cooling and gas heat

Unit Size (Tons)	Model Number Digits 4, 5, 6	Model	
		TSK, YSK	THK, YHK
3	036	A.0	A.0
4	048		B.0
5	060		
6	072	B.0	
7.5	090		
8.5	102		
10	120		
12.5	150	C.0	D.0
15	180	D.0	D.0
17.5	210		
20	240		
25	300		

Note: *Equipment feature availability is dependent on unit configuration. For more information, see Trane® Select Assist™ or contact product support.*

Dimensional Data

Figure 3. A.0 cabinet

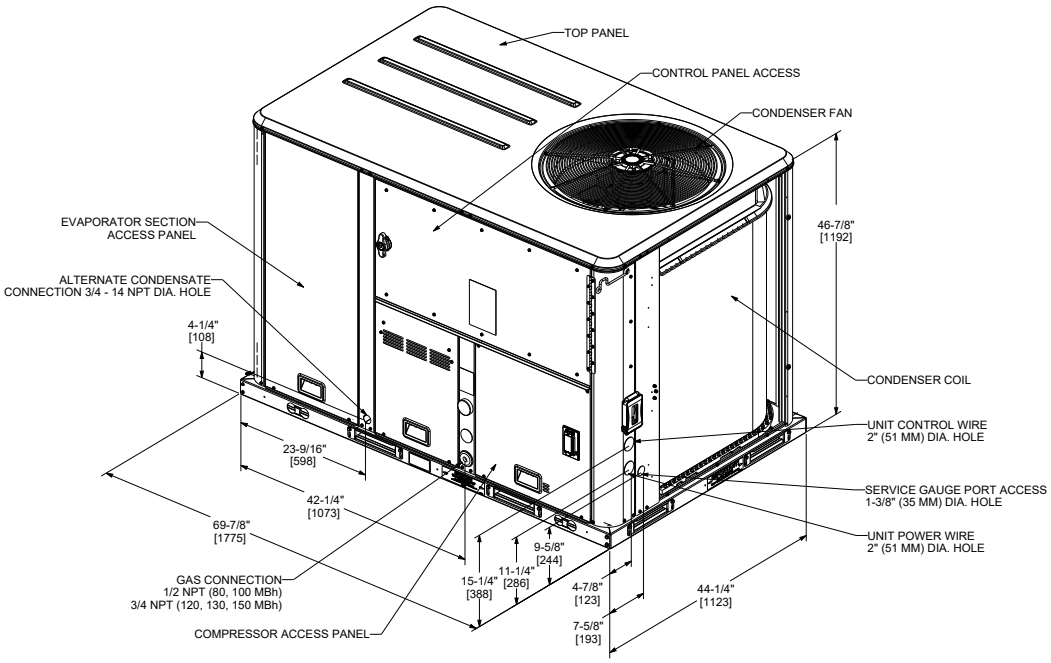

Figure 4. A.0 cabinet – downflow airflow supply/return, through-the-base utilities

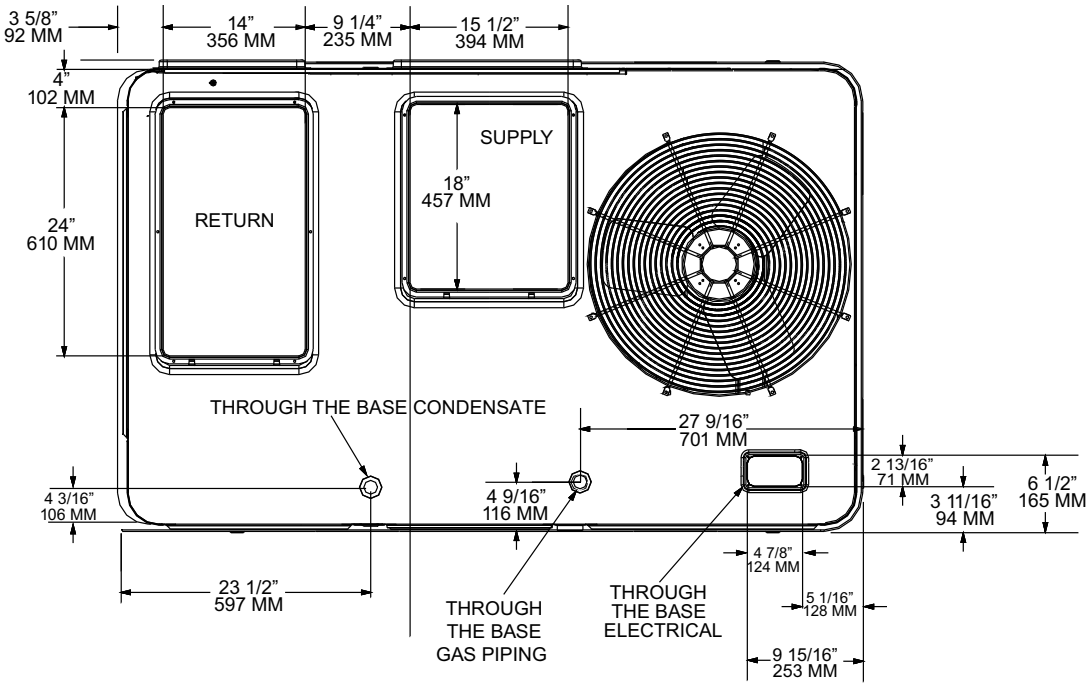

Figure 5. A.0 cabinet – horizontal airflow supply/return

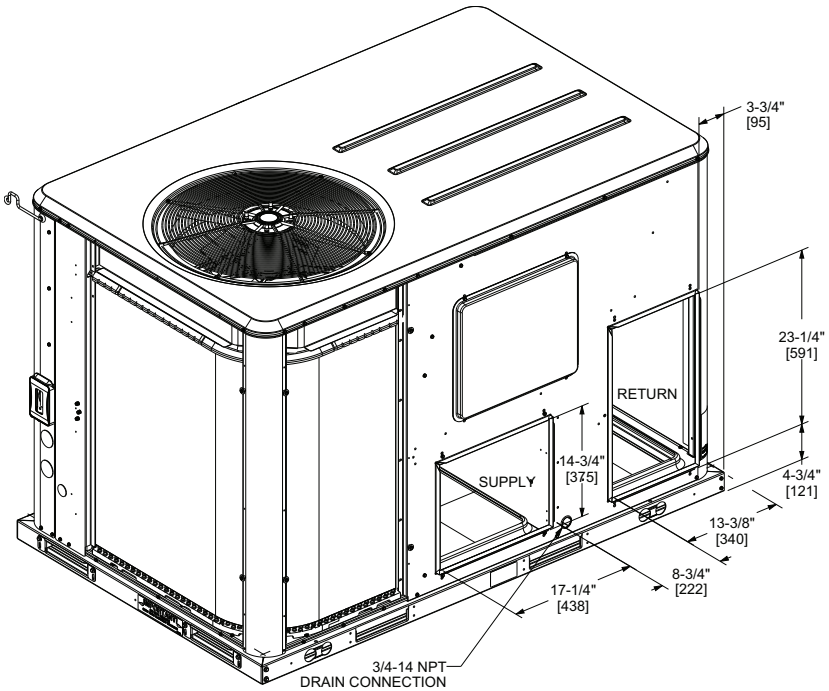

Figure 6. A.0 cabinet – unit clearance and roof opening

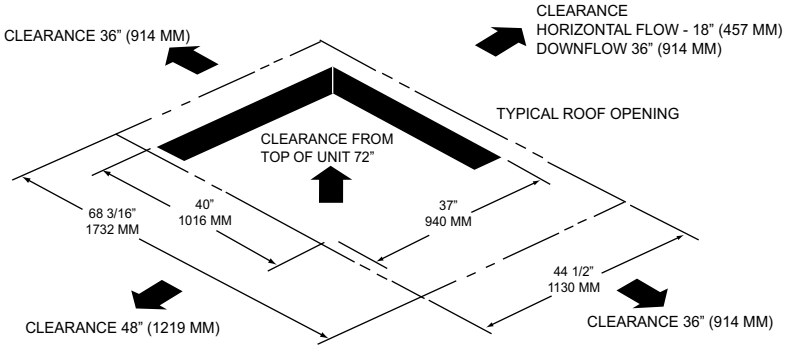

Figure 7. A.0 cabinet – roof curb

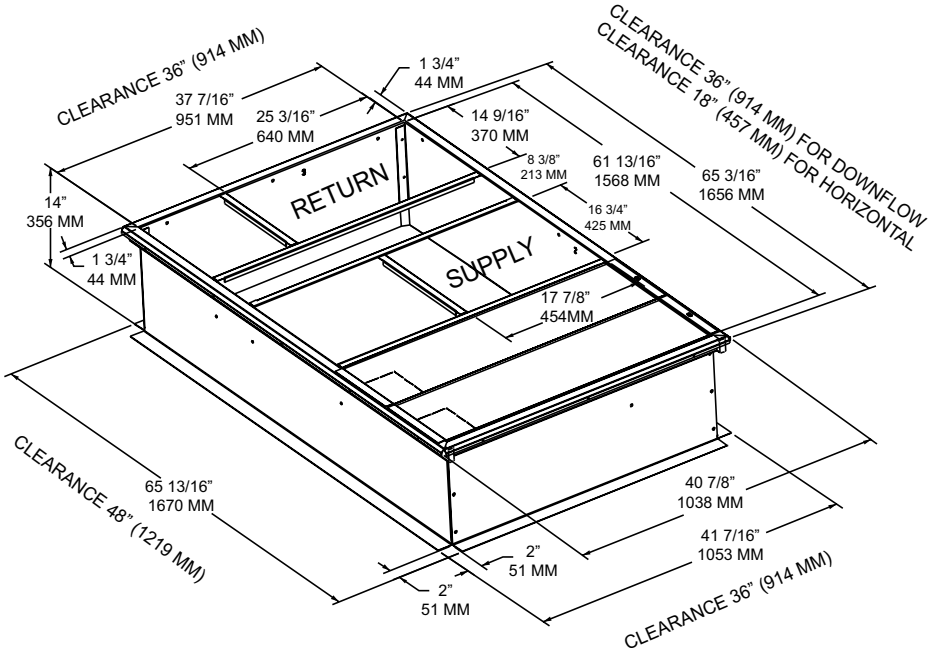

Figure 8. A.0 cabinet – downflow duct connections, field fabricated

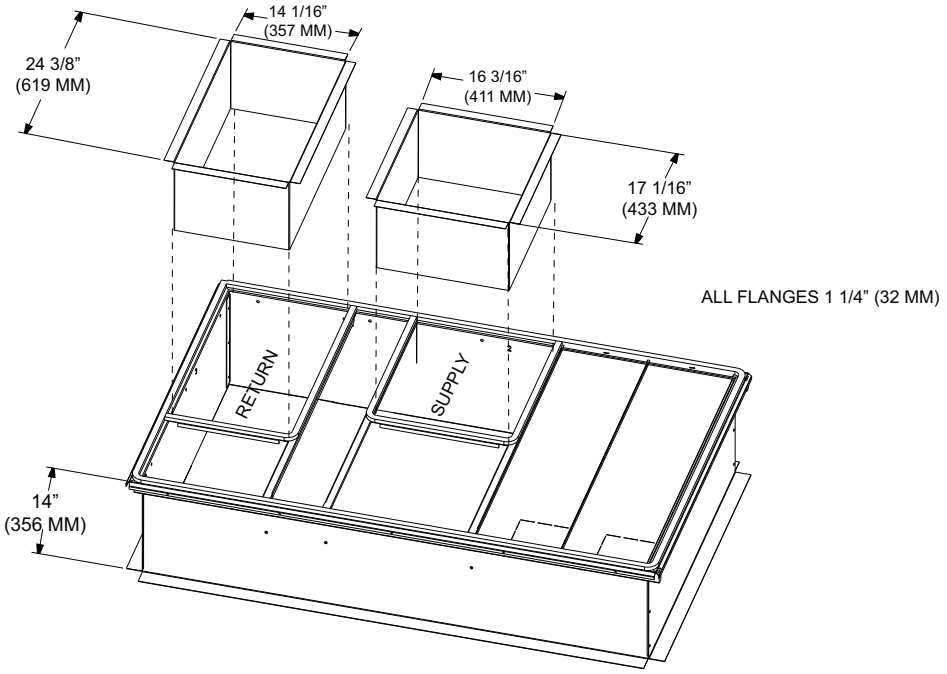

Figure 9. A.0 cabinet – swing diameter for hinged door(s) option

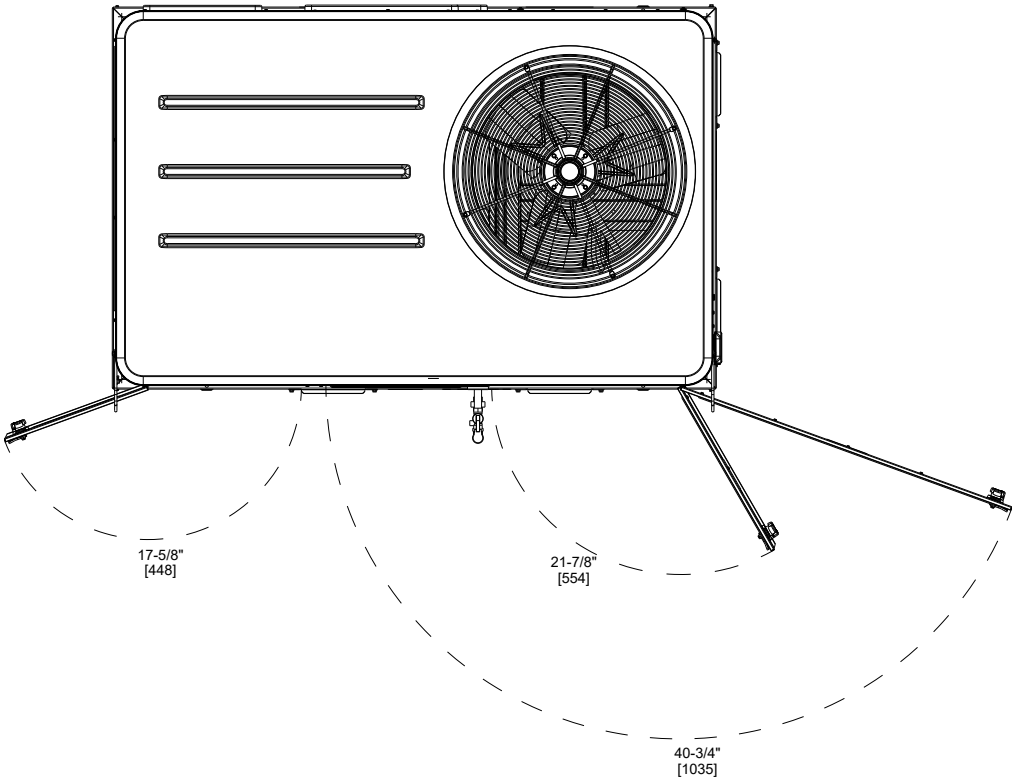

Figure 10. B.0 cabinet

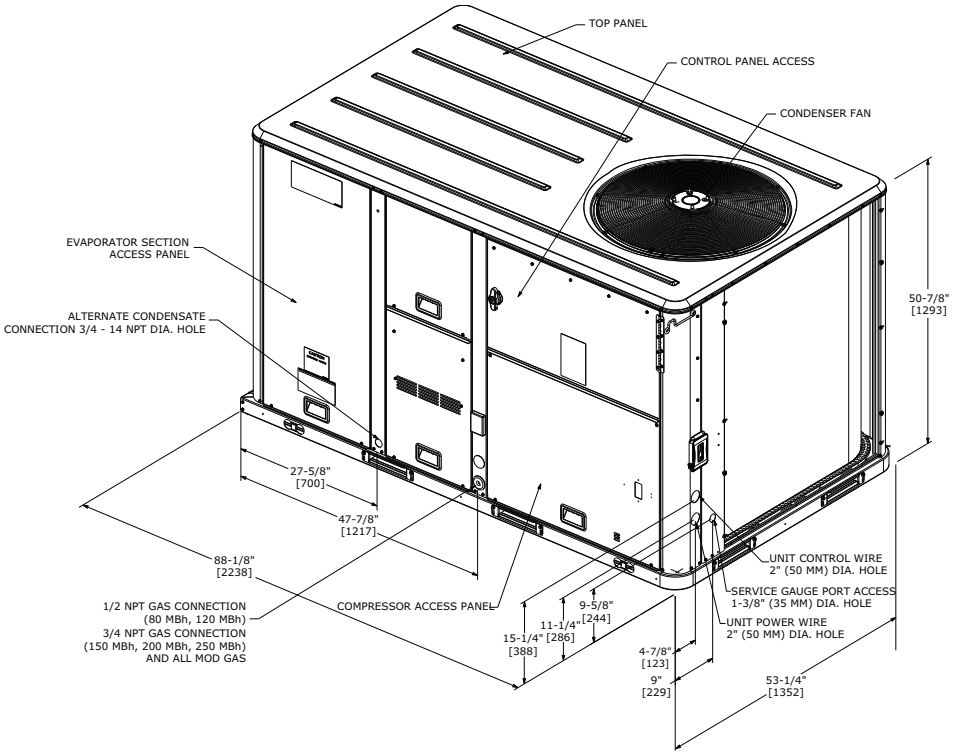

Figure 11. B.0 cabinet – downflow airflow supply/return, through-the-base utilities

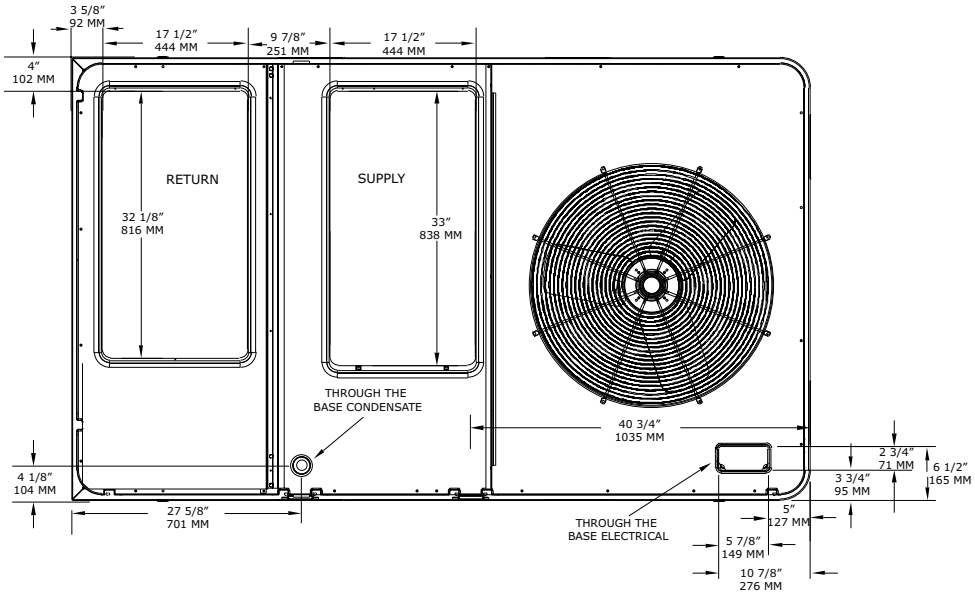

Figure 12. B.0 cabinet – horizontal airflow supply/return

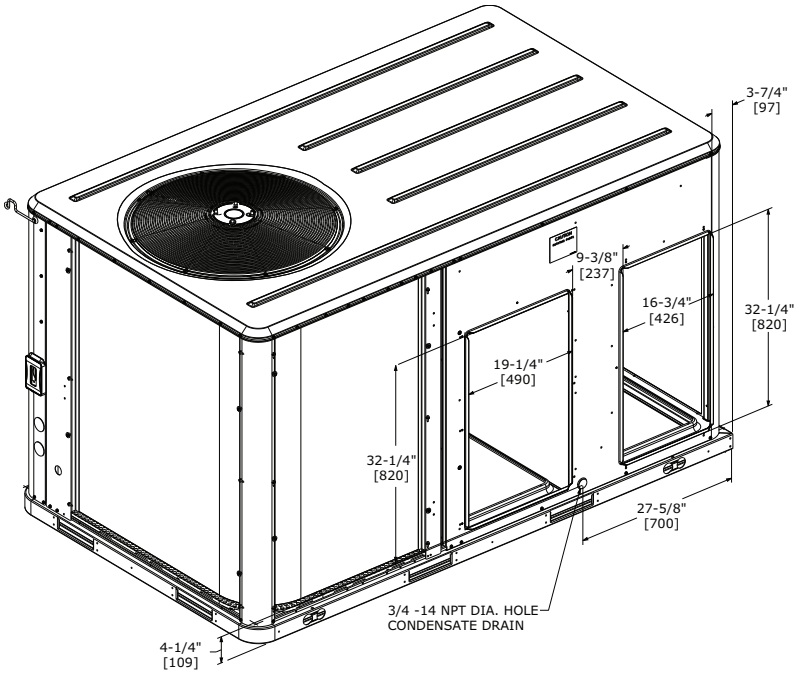

Figure 13. B.0 cabinet – unit clearance and roof opening

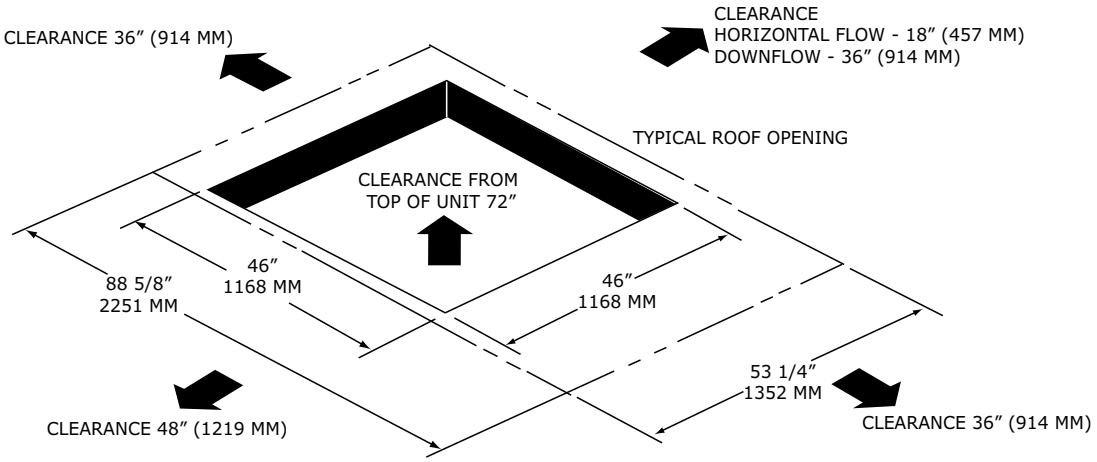

Figure 14. B.0 cabinet – roof curb

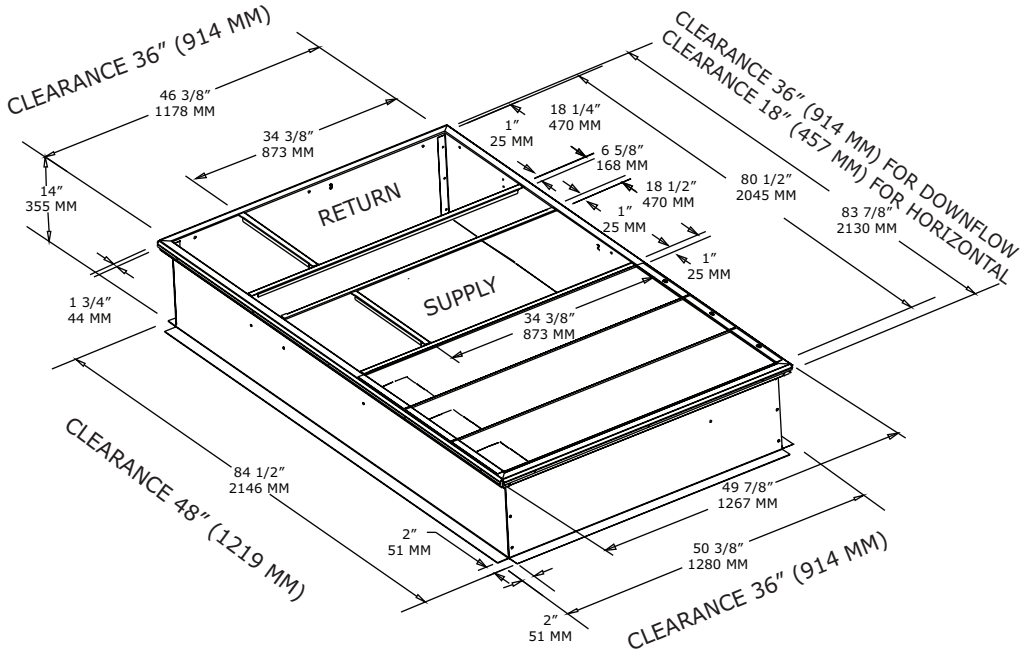

Figure 15. B.0 cabinet – downflow duct connections, field fabricated

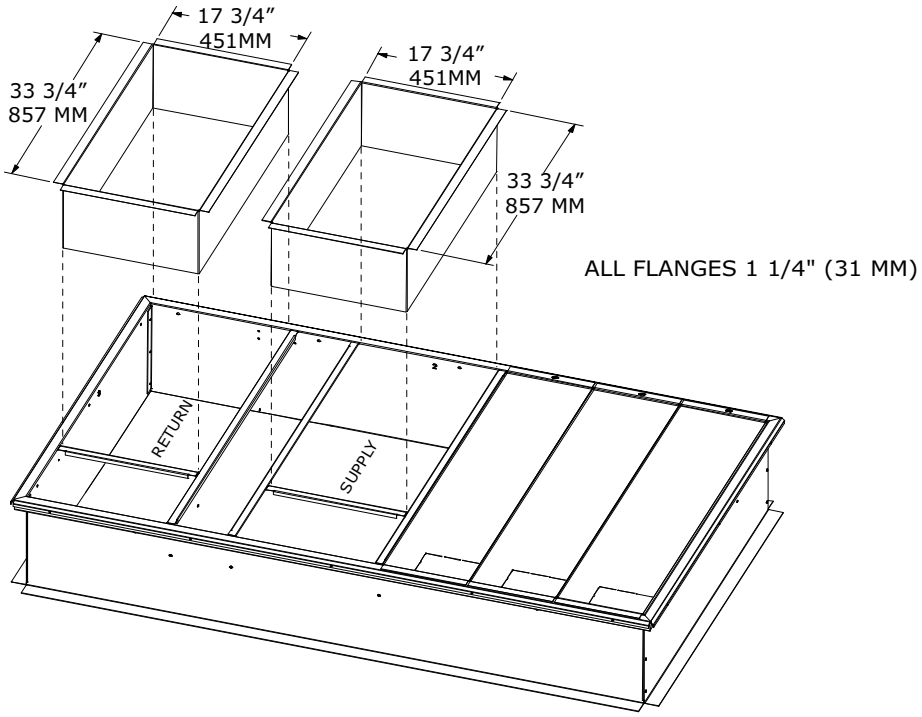

Figure 16. B.0 cabinet – swing diameter for hinged door(s) option

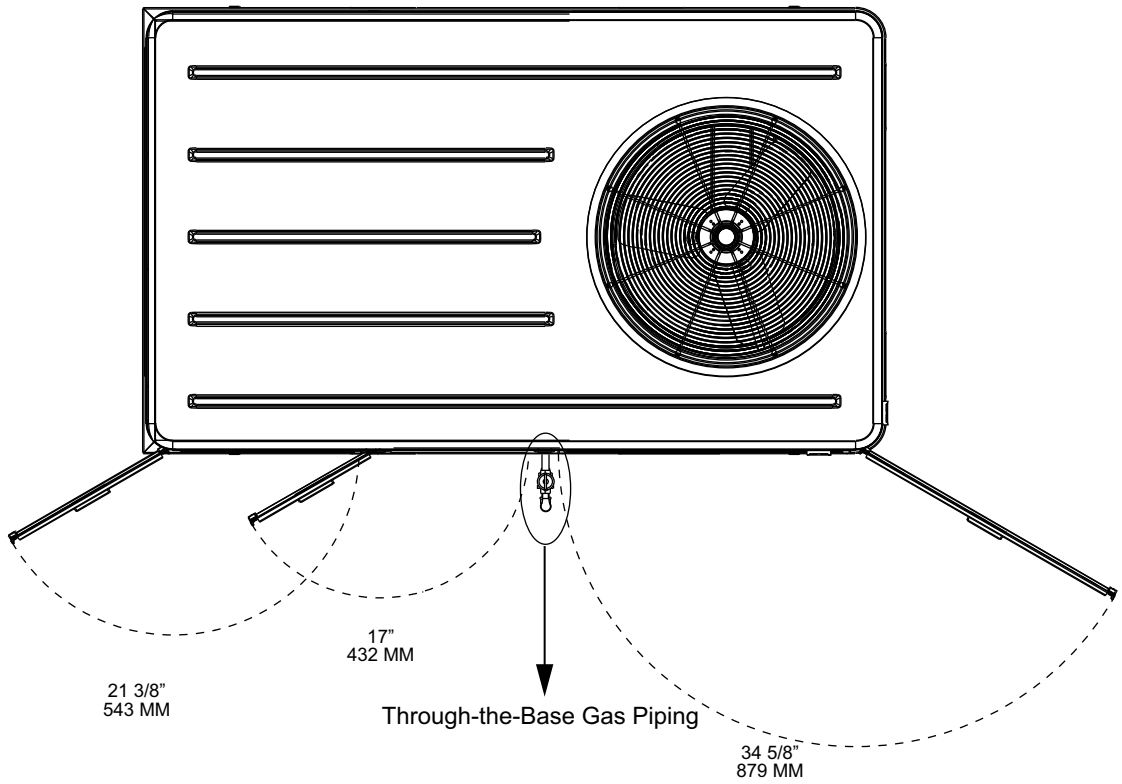

Figure 17. C.0 cabinet

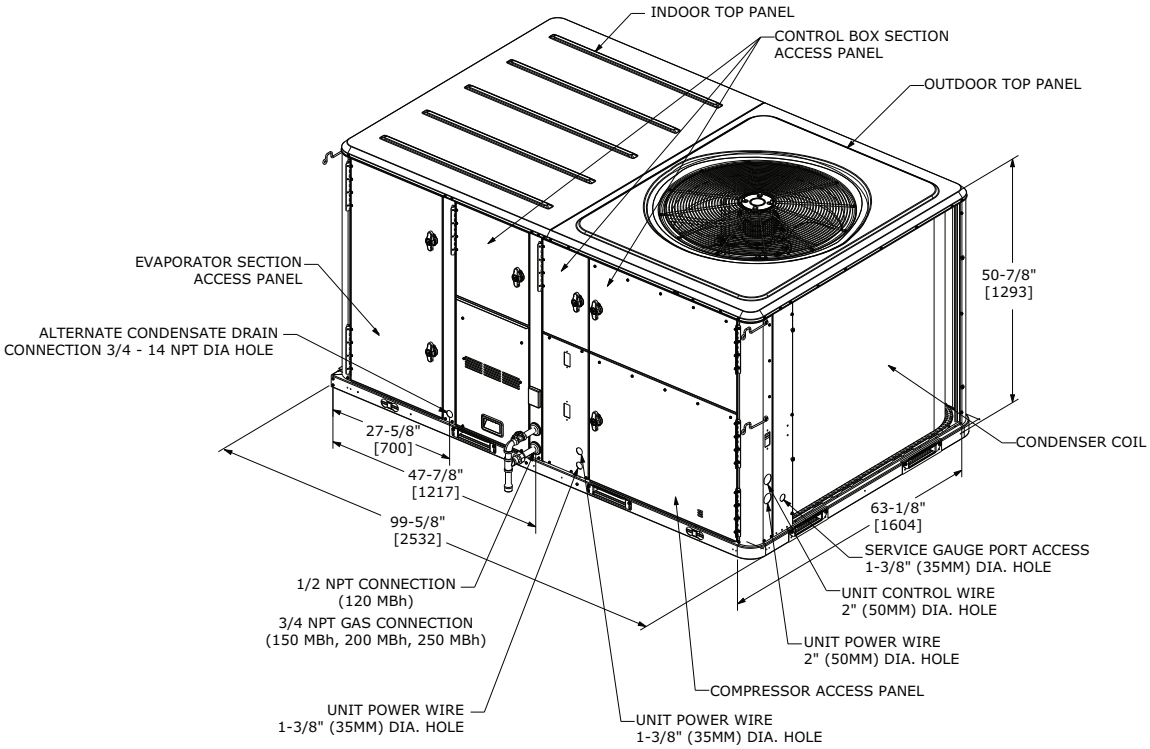

Figure 18. C.0 cabinet – downflow airflow supply/return, through-the-base utilities

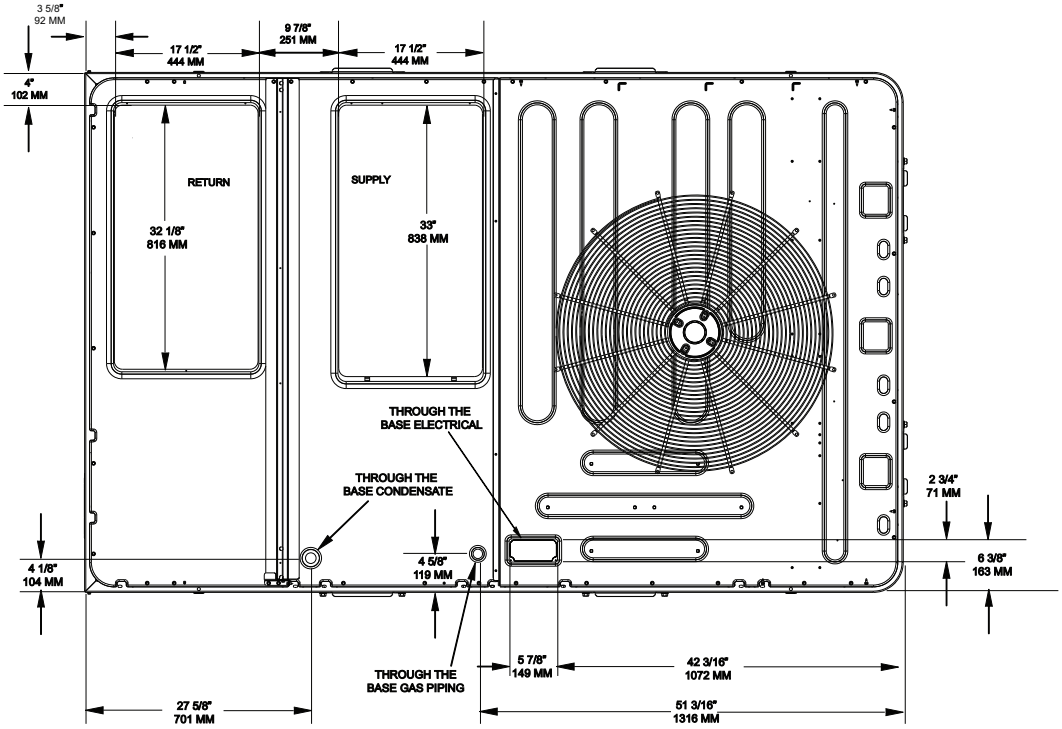

Figure 19. C.0 cabinet – horizontal airflow, supply and return

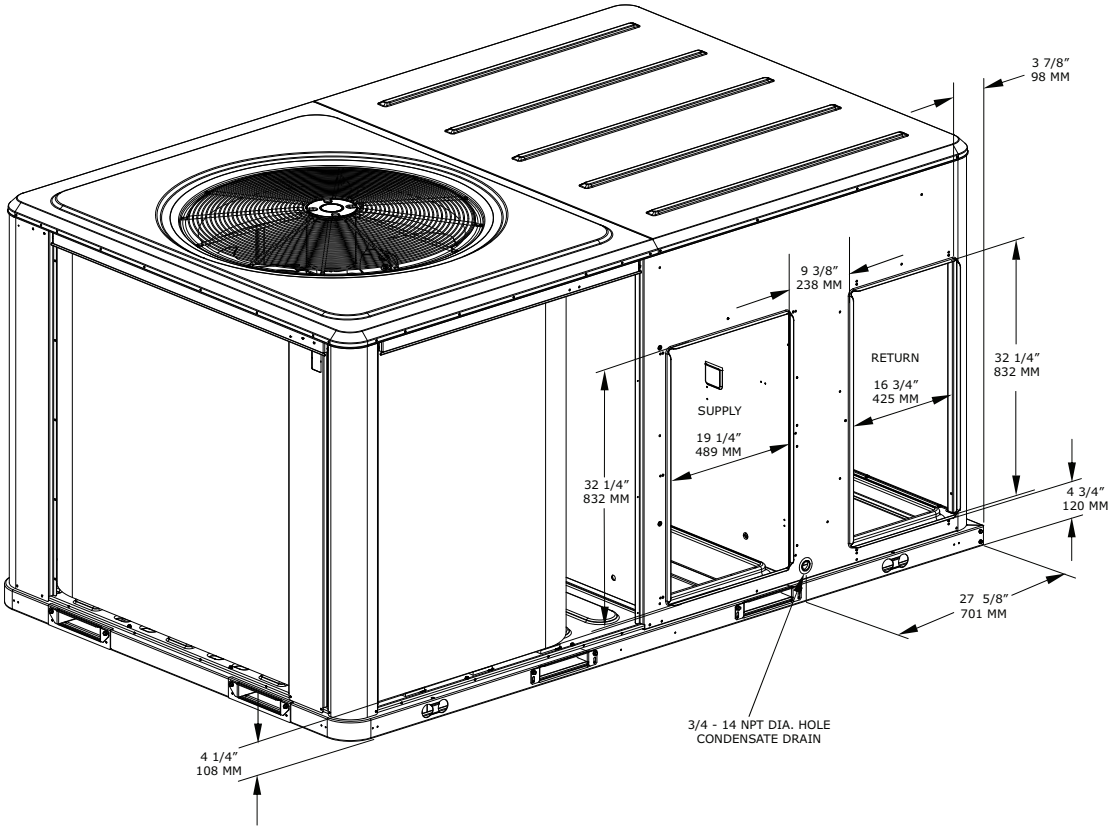

Figure 20. C.0 cabinet – unit clearance and roof opening

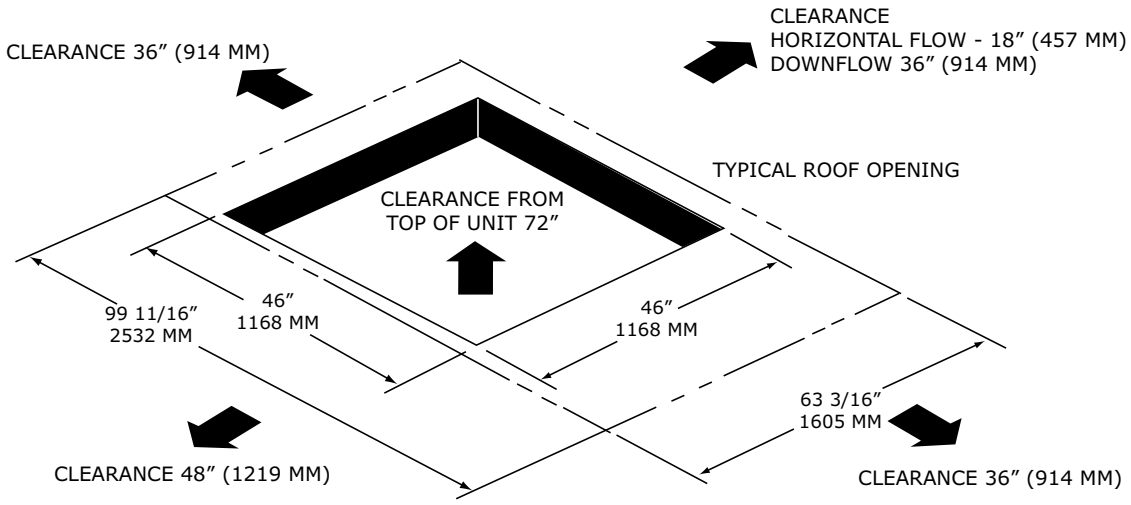

Figure 21. C.0 cabinet – roof curb

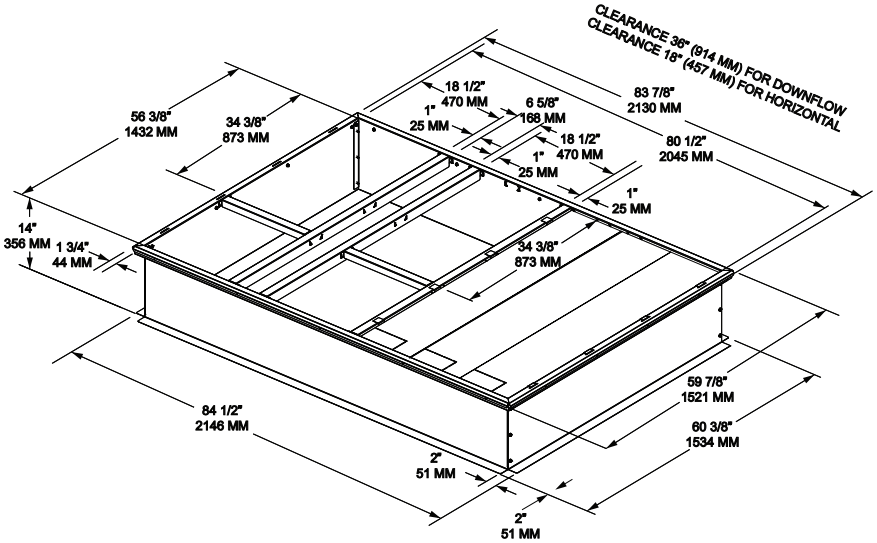

Figure 22. C.0 cabinet – swing diameter for hinged door(s) option

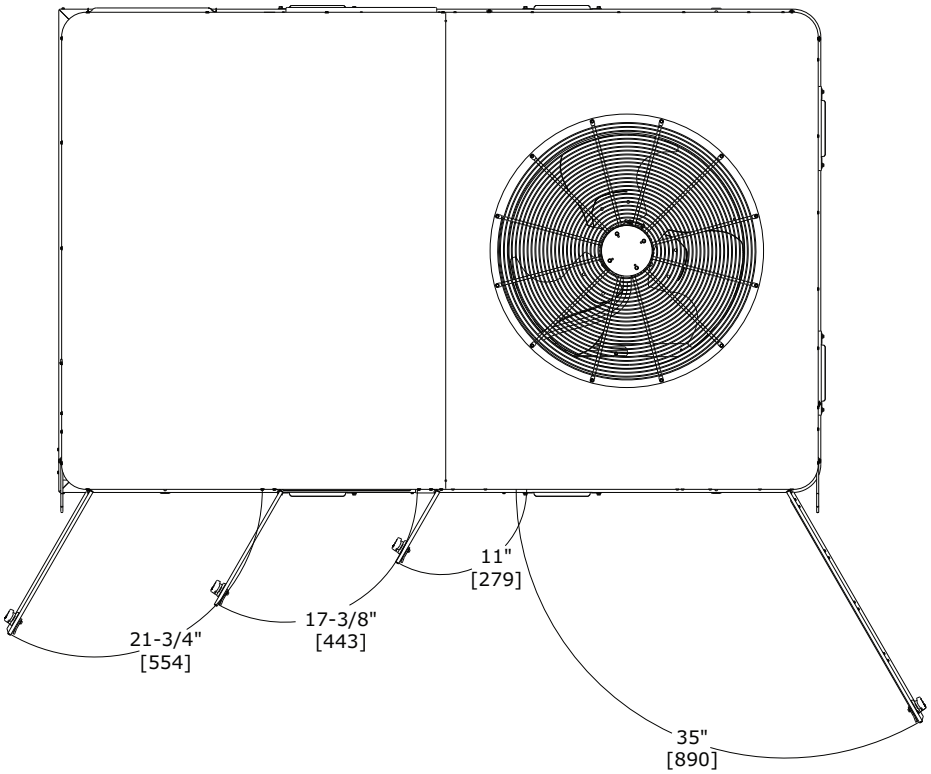

Figure 23. A.0, B.0 and C.0 cabinets – standard economizer, manual or motorized fresh air damper

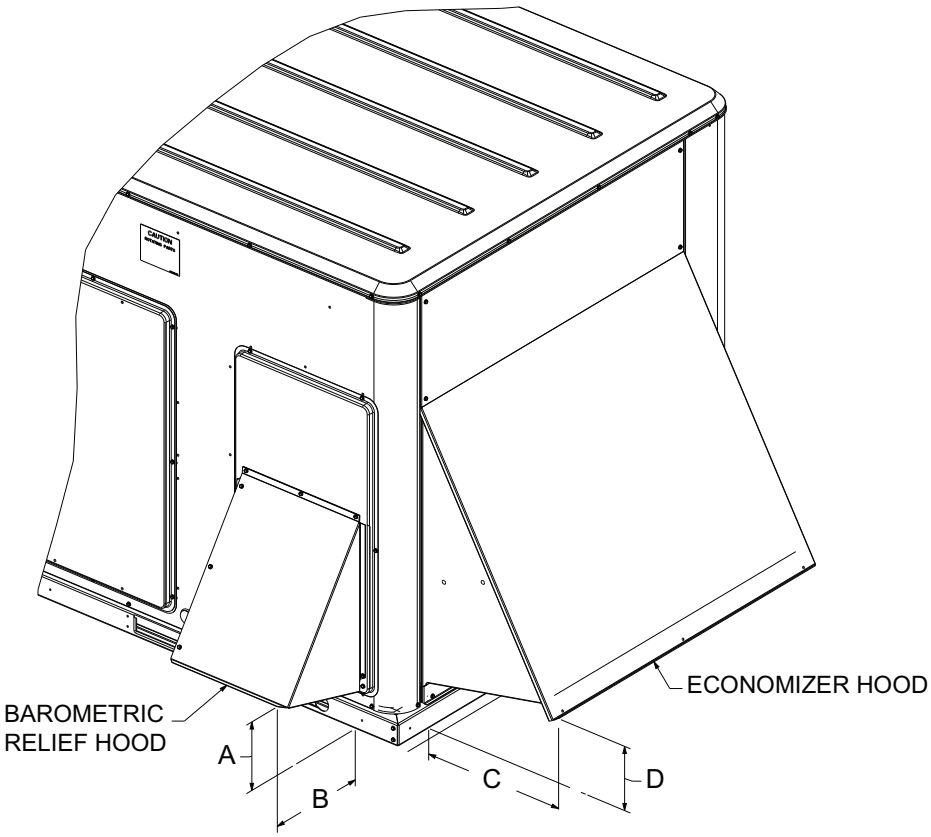

Cabinet	Dimension							
	A		B		C		D	
	inch	mm	inch	mm	inch	mm	inch	mm
A.0	6 7/8	175	9 1/8	232	12 1/2	318	6 1/4	159
B.0 and C.0	7 3/4	197	12	305	16 3/4	425	7 1/4	184

Figure 24. A.0, B.0 and C.0 cabinet – power exhaust with standard economizer

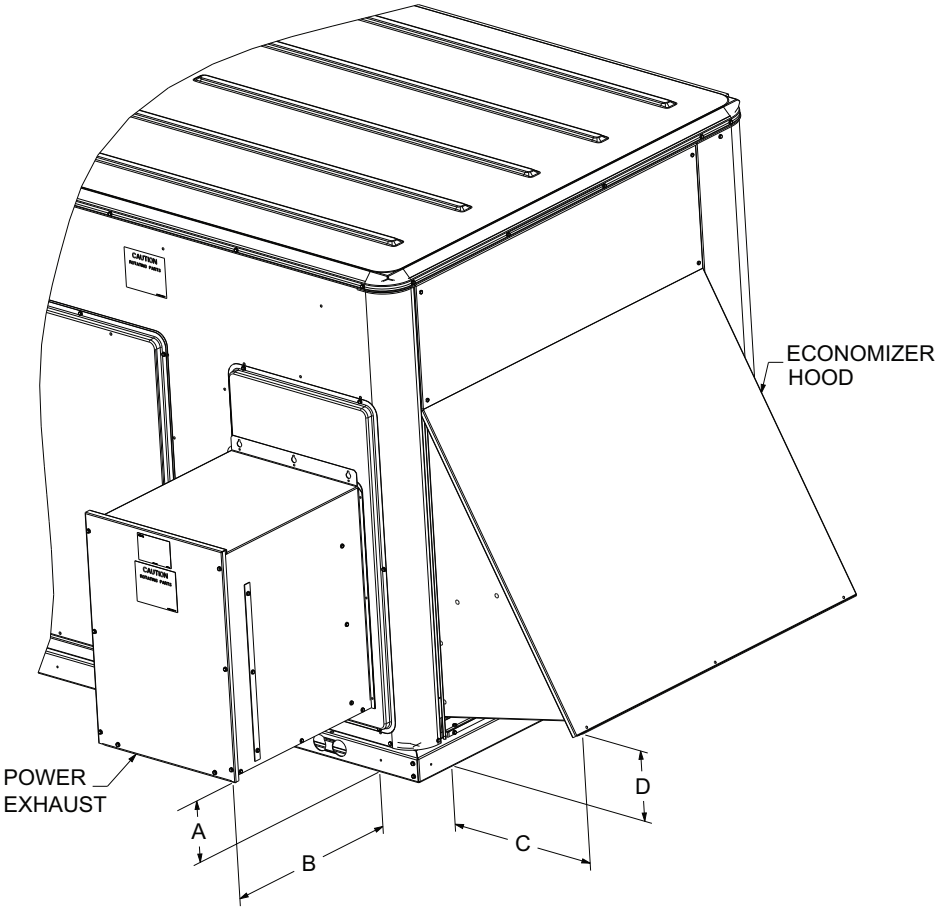

Cabinet	Dimension							
	A		B		C		D	
	inch	mm	inch	mm	inch	mm	inch	mm
A.0	6 1/4	159	16 3/4	425	12 1/2	318	6 1/4	159
B.0 and C.0	6 3/8	162	20 1/2	521	16 3/4	425	7 1/4	184

Figure 25. A.0, B.0 and C.0 cabinet – power exhaust with low leak economizer

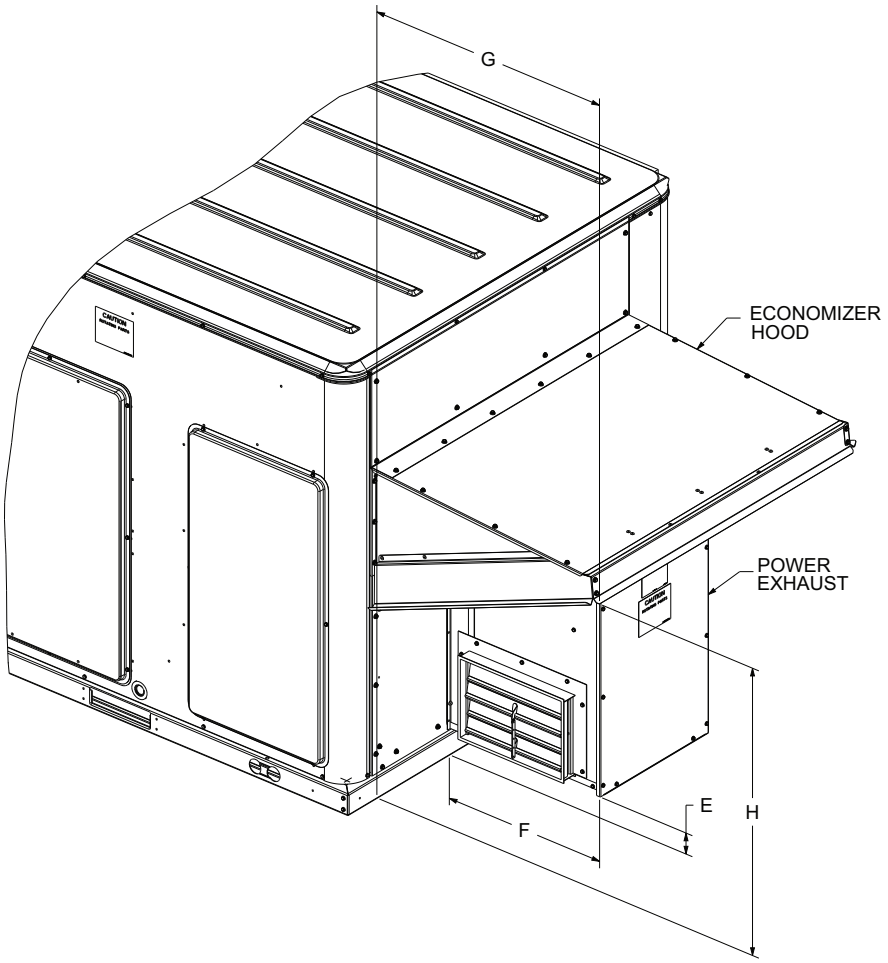

Cabinet	Dimension							
	E		F		G		H	
	inch	mm	inch	mm	inch	mm	inch	mm
A.0	2 1/2	64	16	406	19 3/4	502	27	686
B.0 and C.0	2 1/2	64	19 3/4	502	29 1/4	743	33 1/2	852

Figure 26. D.0 and D.1 cabinets

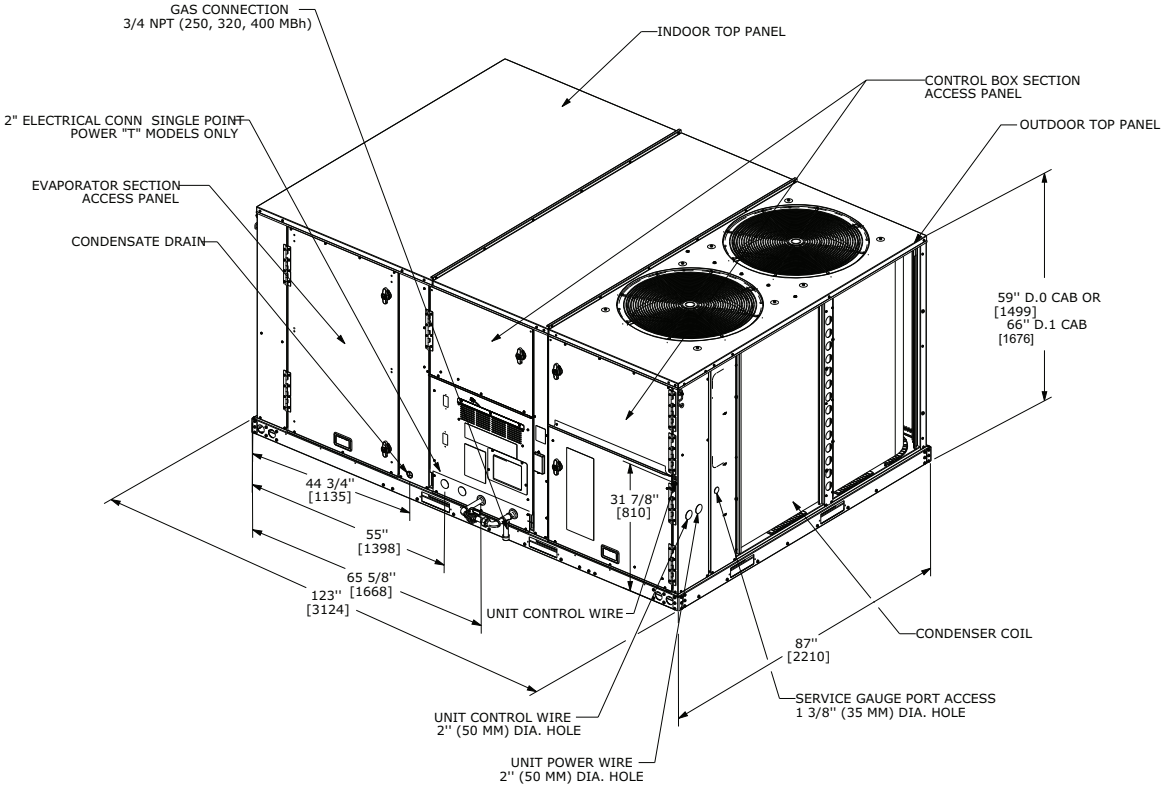

Figure 27. D.0 and D.1 cabinets – downflow airflow supply/return, through-the-base utilities

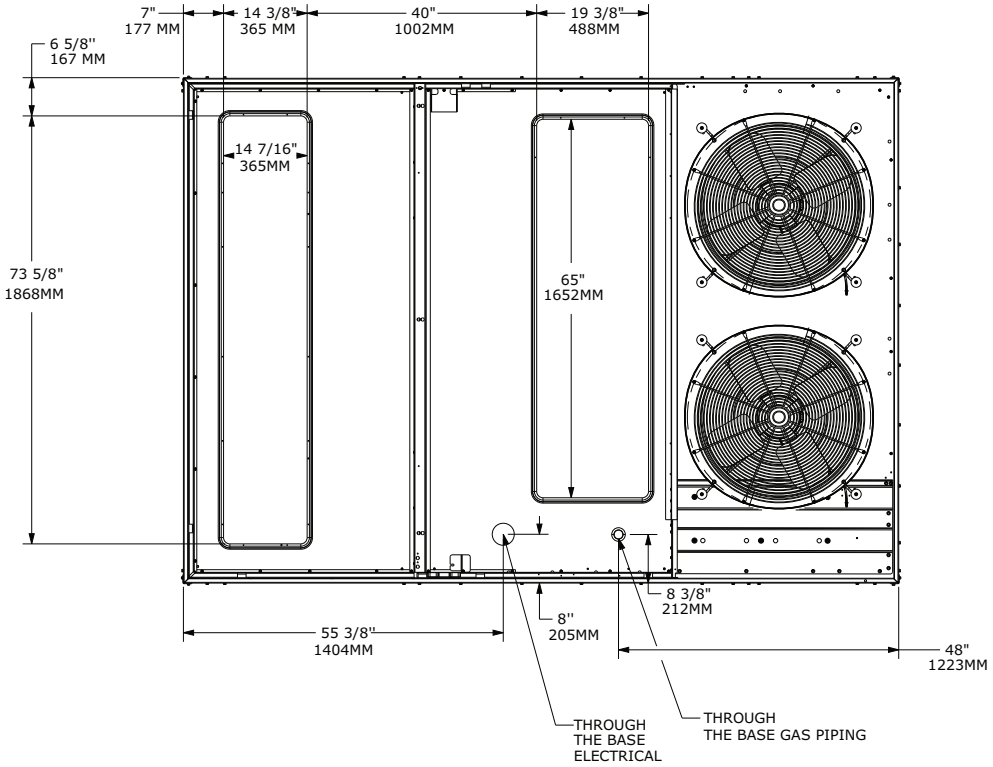

Figure 28. D.0 and D.1 cabinets – horizontal airflow supply/return

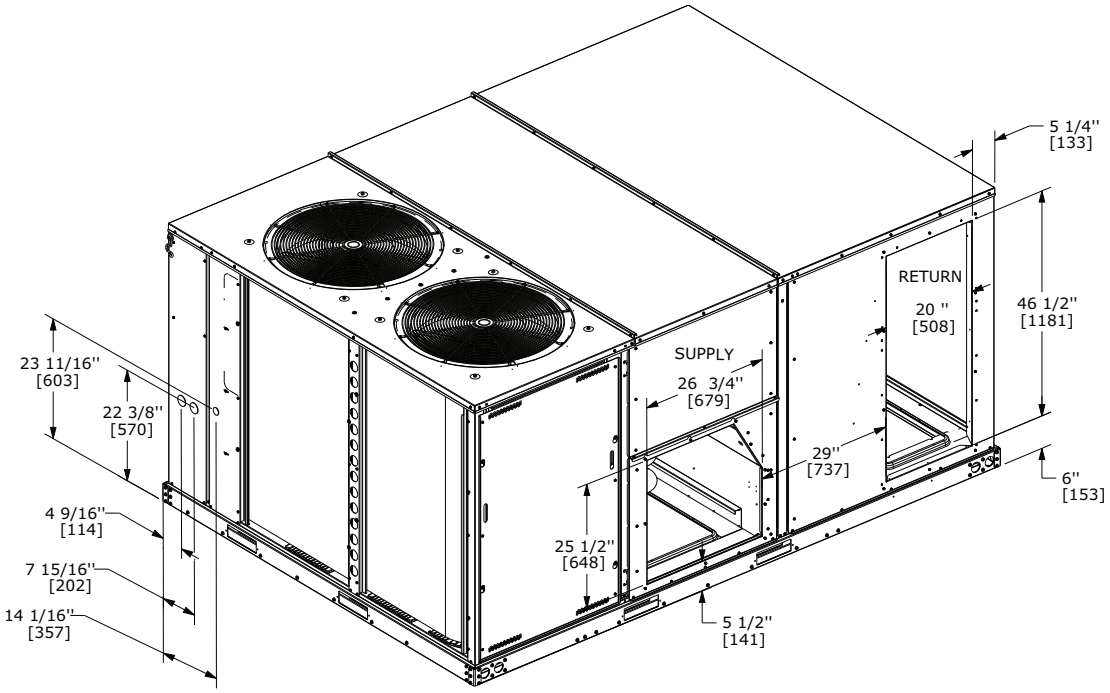

Figure 29. D.0 and D.1 cabinets – unit clearance and roof opening

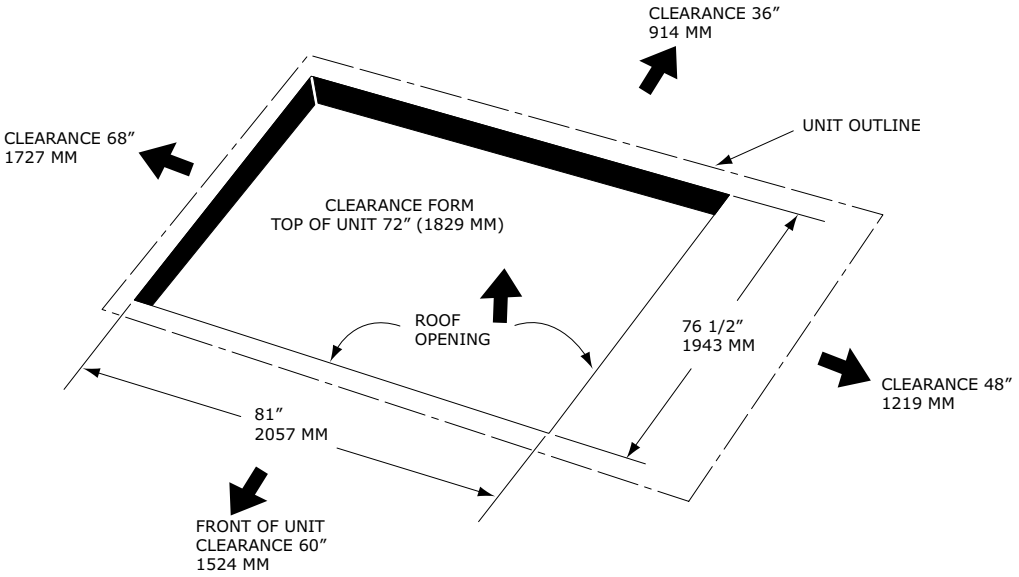

Figure 30. D.0 and D.1 cabinets – roof curb

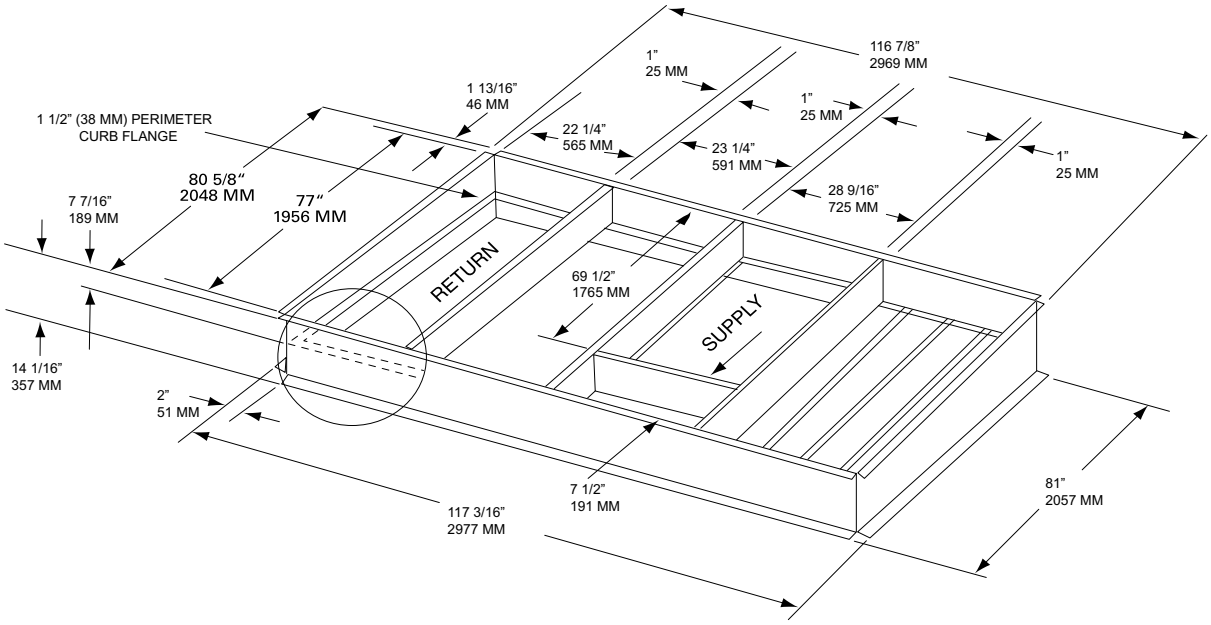

Figure 31. D.0 and D.1 cabinets – swing diameter for hinged door(s) option

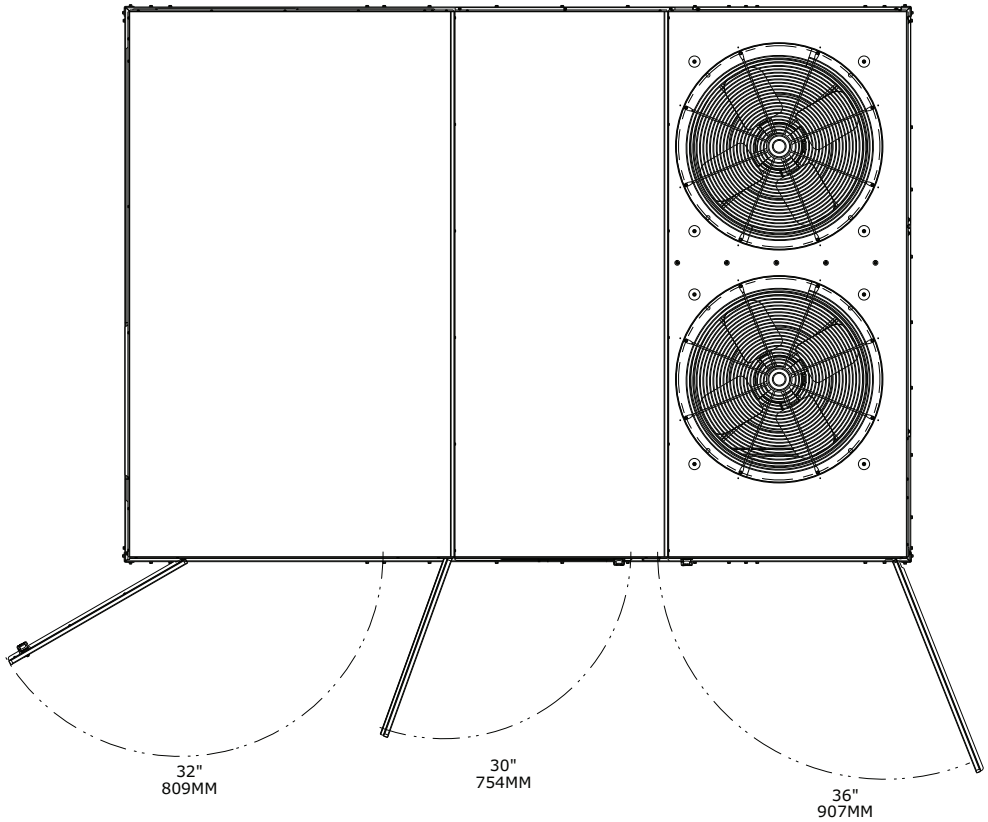

Figure 32. D.0 and D.1 cabinets – power exhaust

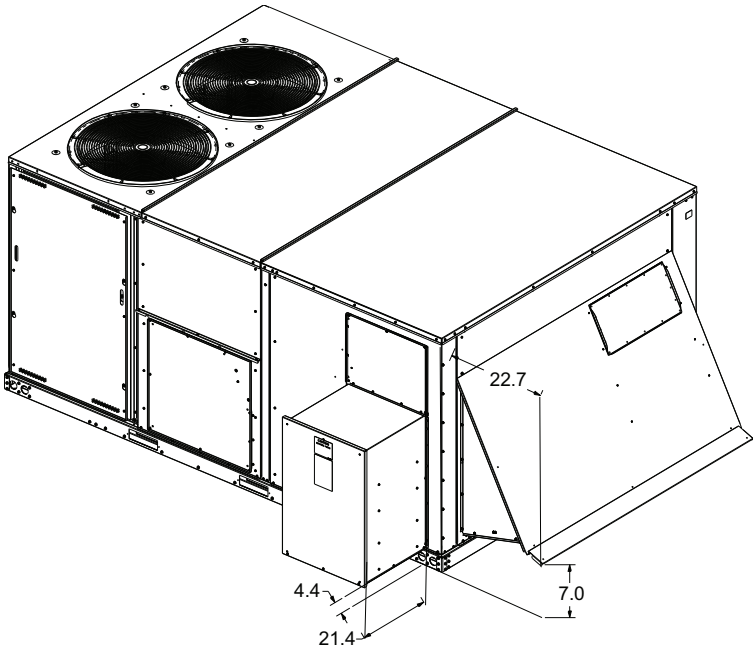

Figure 33. Gas pipe height

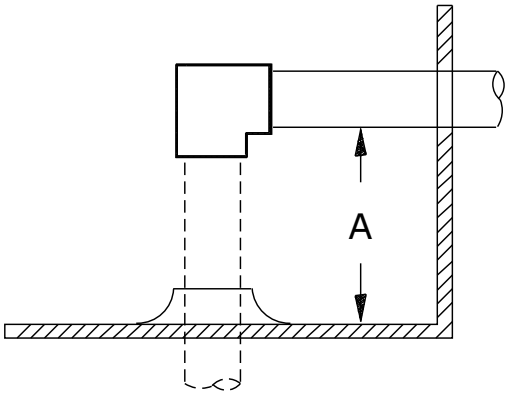

Note: *Height of gas pipe required from inside unit base to gas shut off assembly (factory provided).*

Cabinet	Dimension A	
	inch	mm
A.0, B.0, and C.0	4 5/8	117
D.0 and D.1	1 3/6	30

Clearances

Figure 34, p. 31 illustrates the minimum operating and service clearances for either a single or multiple unit installation. These clearances are the minimum distances necessary for adequate serviceability, cataloged unit capacity, and peak operating efficiency. Providing less than the recommended clearances may result in condenser coil starvation, “short-circuiting” of exhaust and economizer airflows, or recirculation of hot condenser air.

Figure 34. Typical installation clearances for single and multiple unit applications

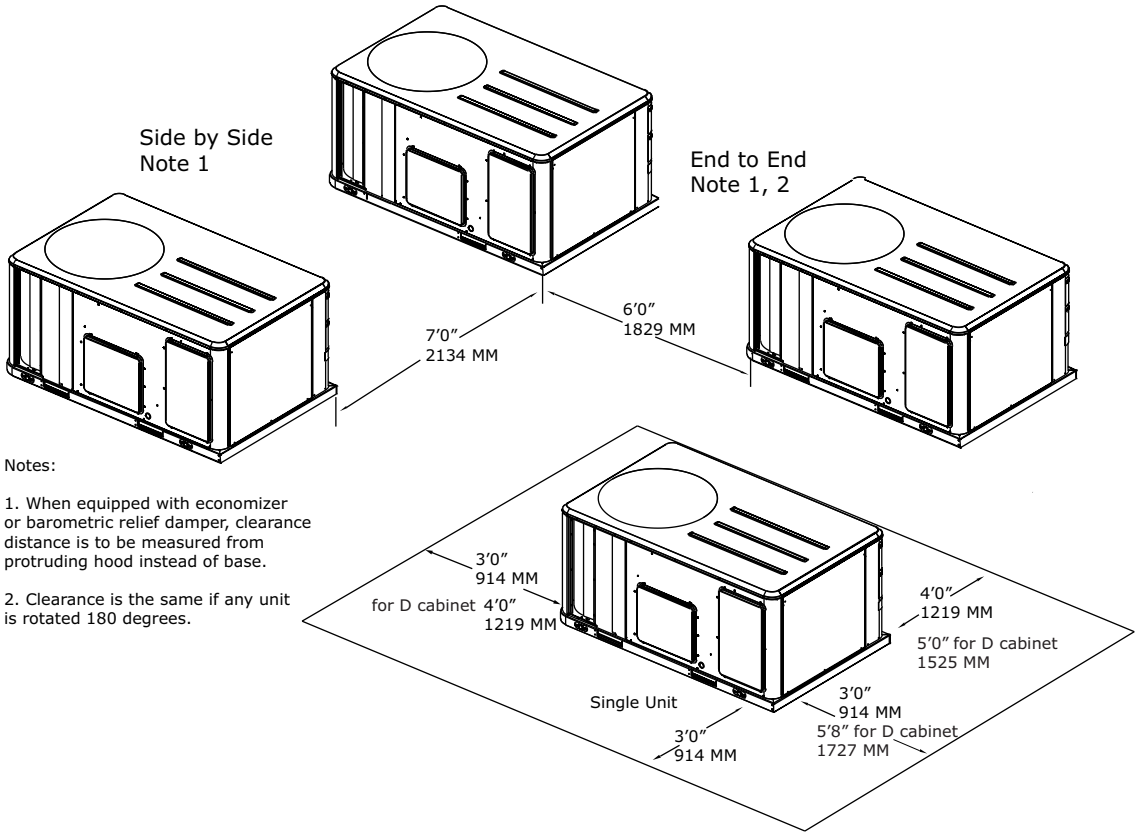

Weights

Table 3. Model weights, corner weights (lbs) and center of gravity dimensions (in.)

Tons	Unit Model No.	Model Weights[a]		Corner Weights[b]				Center of Gravity (in.)	
		Shipping	Net	A	B	C	D	Length	Width
Standard Efficiency									
3	TSK036	667	589	184	147	111	147	31	19
4	TSK048	686	609	194	153	111	152	30	19
5	TSK060	705	629	202	154	112	160	30	19
6	TSK072	986	892	319	267	139	167	41	18
7.5	TSK090	1008	914	327	273	143	171	41	18
8.5	TSK102	1029	935	335	279	146	175	41	18
10	TSK120	1044	950	340	284	148	178	41	18
12.5	TSK150	1412	1218	464	343	175	236	43	21
15	TSK180	2040	1820	611	447	322	440	52	36
17.5	TSK210	2070	1850	612	463	334	441	53	36
20	TSK240	2140	1920	689	472	309	450	50	34
25	TSK300	2190	1970	684	485	332	469	51	35

Table 3. Model weights, corner weights (lbs) and center of gravity dimensions (in.) (continued)

Tons	Unit Model No.	Model Weights[a]		Corner Weights[b]				Center of Gravity (in.)	
		Shipping	Net	A	B	C	D	Length	Width
High Efficiency									
3	THK036	684	607	192	153	116	146	31	19
4	THK048	875	777	293	231	112	141	39	17
5	THK060	895	797	293	239	119	146	40	18
6	THK072	986	892	319	267	139	167	41	18
7.5	THK090	1008	914	327	273	143	171	41	18
8.5	THK102	1029	935	335	279	146	175	41	18
10	THK120	1044	950	340	284	148	178	41	18
12.5	THK150	2040	1820	611	447	322	440	52	36
15	THK180	2040	1820	611	447	322	440	52	36
17.5	THK210	2070	1850	612	463	334	441	53	36
20	THK240	2140	1920	689	472	309	450	50	34
25	THK300	2190	1970	684	485	332	469	51	35

(a) Weights are approximate. Weights do not include additional factory or field installed options/accessories. For option/accessory additional weights to be added to unit weight, reference the following table.

(b) Corner weights are given for information only.

Table 4. Model weights, corner weights (lbs) and center of gravity dimensions (in.) - gas/electric

Tons	Unit Model No.	Model Weights[a]		Corner Weights[b]				Center of Gravity (in.)	
		Shipping	Net	A	B	C	D	Length	Width
Standard Efficiency									
3	YSK036	728	651	201	165	125	160	31	19
4	YSK048	748	671	210	170	127	164	31	19
5	YSK060	768	691	220	172	126	173	30	19
6	YSK072	1031	937	329	279	152	177	41	18
7.5	YSK090	1060	966	338	287	158	183	41	18
8.5	YSK102	1096	998	345	295	165	193	41	19
10	YSK120	1115	1017	354	302	168	193	41	18
12.5	YSK150	1412	1218	464	343	175	236	43	21
15	YSK180	2220	2000	671	492	354	483	52	36
17.5	YSK210	2250	2030	672	508	366	484	53	36
20	YSK240	2320	2100	754	516	337	493	50	34
25	YSK300	2370	2150	746	529	363	512	51	35
High Efficiency									
3	YHK036	728	651	201	165	125	160	31	19
4	YHK048	923	825	295	250	129	151	41	18
5	YHK060	951	853	304	259	134	156	41	18
6	YHK072	1035	937	329	279	152	177	41	18
7.5	YHK090	1064	966	338	287	158	183	41	18
8.5	YHK102	1096	998	345	295	165	193	41	19
10	YHK120	1115	1017	354	302	168	193	41	18
12.5	YHK150	2220	2000	671	492	354	483	52	36
15	YHK180	2220	2000	671	492	354	483	52	36
17.5	YHK210	2250	2030	672	508	366	484	53	36

Table 4. Model weights, corner weights (lbs) and center of gravity dimensions (in.) - gas/electric (continued)

Tons	Unit Model No.	Model Weights[a]		Corner Weights[b]				Center of Gravity (in.)	
		Shipping	Net	A	B	C	D	Length	Width
20	YHK240	2320	2100	754	516	337	493	50	34
25	YHK300	2370	2150	746	529	363	512	51	35

(a) Weights are approximate. Weights do not include additional factory or field installed options/accessories. For option/accessory additional weights to be added to unit weight, reference the following table.
(b) Corner weights are given for information only.

Figure 35. Corner weights

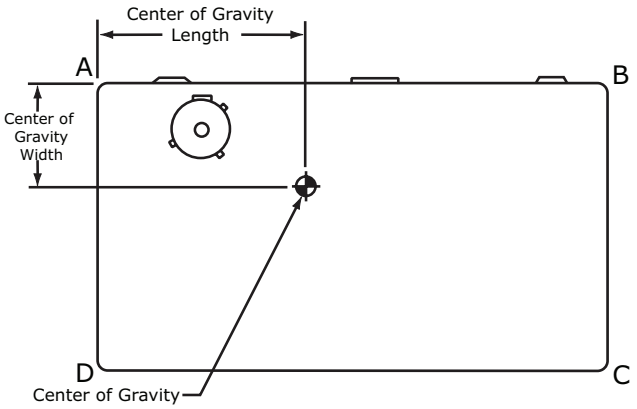

Table 5. Factory installed options (FIOPS)/accessory net weights (lb)

	Standard Efficiency				High Efficiency		
Accessory	T/YSK036-060	T/YSK072-120	T/YSK150	T/YSK180-300	T/YHK036	T/YHK048-120	T/YHK150-300
Barometric Relief	7	10	10	40	7	10	40
Economizer	26	36	36	91	26	36	91
Electric Heaters[a]	15	44	50	75	15	44	75
Hinged Doors	10	12	12	20	10	12	20
Low Leak Economizer - Downflow	79	91	91	150	79	91	150
Low Leak Economizer - Horizontal	130	186	186	180	130	186	180
Manual Outside Air Damper	16	26	26	15	16	26	15
Motorized Outside Air Damper	20	30	30	82	20	30	82
Oversized Motor[b]	5	14	14	30	5	14	30
Powered Convenience Outlet	38	38	50	50	38	38	50
Power Exhaust	40	80	80	110	40	80	110
Reheat Coil	13	16	20	33	13	16	33
Roof Curb	61	105	111	235	61	105	235
Smoke Detector, Supply[b]	-	5	5	5	-	5	5
Smoke Detector, Return	7	7	7	5	7	7	5
Stainless Steel Heat Exchanger[c]	4	6	6	5	4	6	5
Through-the-Base Electrical	8	13	13	10	8	13	10
Through-the-Base Gas[c]	5	5	5	10	5	5	10
Unit Mounted Circuit Breaker	5	10	10	10	5	10	10
Unit Mounted Disconnect	5	5	5	10	5	5	10

Notes:

1. Weights for options not listed are less than 5 pounds.
2. Net weight should be added to unit weight when ordering factory-installed accessories.
3. Weights are approximate.

(a) Only applies to T*K models.
(b) Not available on all models.
(c) Only applies to Y*K models.

Lifting and Rigging

⚠ WARNING

Heavy Object!

Failure to follow instructions below could result in unit dropping which could result in death or serious injury, and equipment or property-only damage.

Ensure that all the lifting equipment used is properly rated for the weight of the unit being lifted. Each of the cables (chains or slings), hooks, and shackles used to lift the unit must be capable of supporting the entire weight of the unit. Lifting cables (chains or slings) may not be of the same length. Adjust as necessary for even unit lift.

⚠ WARNING

Improper Unit Lift!

Failure to properly lift unit in a LEVEL position could result in unit dropping and possibly crushing operator/technician which could result in death or serious injury, and equipment or property-only damage.

Test lift unit approximately 24 inches (61 cm) to verify proper center of gravity lift point. To avoid dropping of unit, reposition lifting point if unit is not level.

Figure 36. Rigging and center of gravity — A.0, B.0 and C.0 cabinets

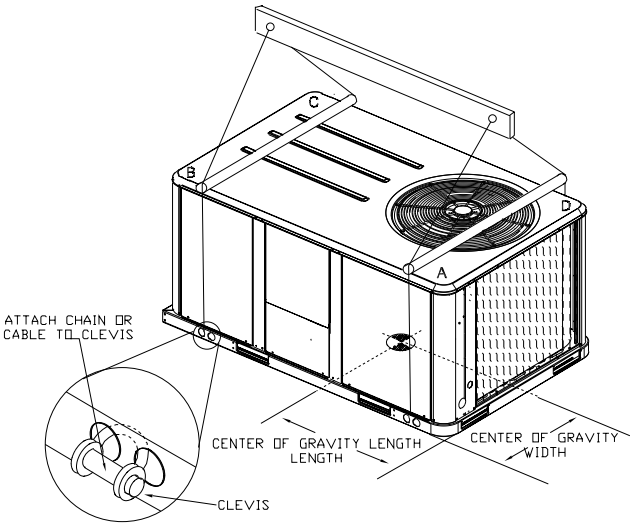

Figure 37. Rigging and center of gravity — D.0 and D.1 cabinets

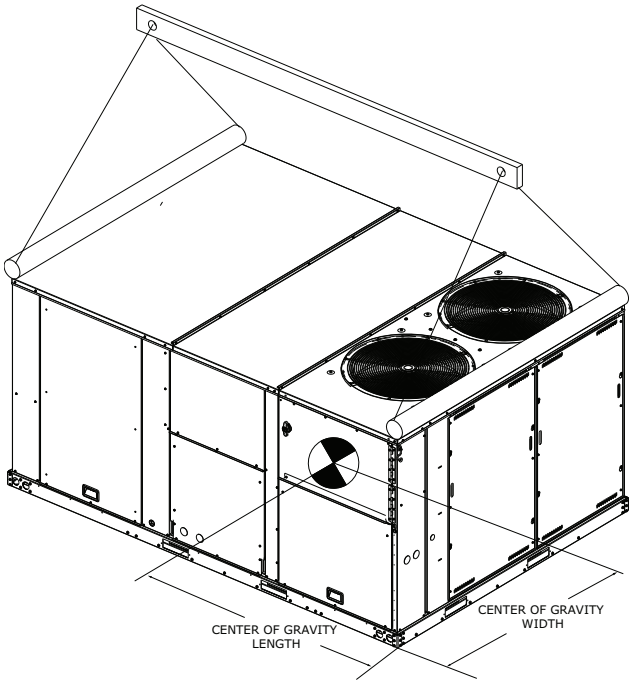

A2L Information and Installation Requirements

Installation/Code Compliance Requirements

Building level controls may need to be upgraded/modified to demand leak mitigation actions as described in "Leak Detection System (Refrigerant charge greater than 3.91 lb per circuit)," p. 40. Those actions include, but are not limited to, fully opening damper and VAV boxes (if present), and disabling electric heat in VAV boxes (if present).

Verify the equipment refrigerant charge is in accordance with the room area limitation as described in Minimum Room Area Limits section.

Ensure that there are labels on the equipment stating it contains a flammable refrigerant.

A2L Work Procedures

⚠ WARNING

Risk of Fire — Flammable Refrigerant!

Failure to follow instructions below could result in death or serious injury, and equipment damage.

- **To be repaired only by trained service personnel.**
- **Do not puncture refrigerant tubing.**
- **Dispose of properly in accordance with federal or local regulations.**
- **The equipment shall be stored in a room without continuously operating ignition sources.**

⚠ WARNING

Refrigerant under High Pressure!

Failure to follow instructions below could result in an explosion which could result in death or serious injury or equipment damage.

System contains refrigerant under high pressure. Recover refrigerant to relieve pressure before opening the system. See unit nameplate for refrigerant type. Do not use non-approved refrigerants, refrigerant substitutes, or refrigerant additives.

⚠ WARNING

Hazardous Voltage!

Failure to disconnect power before servicing could result in death or serious injury.

Disconnect all electric power, including remote disconnects before servicing. Follow proper lockout/tagout procedures to ensure the power can not be inadvertently energized. Verify that no power is present with a voltmeter.

The units described in this manual use R-454B refrigerant. Use ONLY R-454B rated service equipment or components with these units. For specific handling concerns with R-454B, contact your local Trane representative.

Installation, repair, removal, or disposal should be performed by trained service personnel.

At all times, Trane's maintenance and service guidelines shall be followed. If in doubt, contact Trane technical support for assistance.

Servicing

Prior to initiating work on equipment, check the area with an appropriate refrigerant detector. Ensure the service personnel are properly trained regarding work in potentially toxic or flammable atmospheres. Ensure that the leak detection equipment being used is suitable for use with all applicable refrigerants, i.e. non-sparking, adequately sealed, or intrinsically safe. Be aware that the refrigerant does not contain an odor.

If any hot work is to be conducted on the refrigerating equipment or any associated parts, appropriate fire extinguishing equipment shall be available on hand. A dry powder or CO_2 fire extinguisher should be located adjacent to the charging area.

At all times, Trane's maintenance and service guidelines shall be followed. If in doubt, contact Trane technical support for assistance.

All maintenance staff and others working in the local area shall be instructed on the nature of the work being carried out. Work in confined spaces shall be avoided.

Ignition Source Mitigation

Do not use any sources of ignition when working on the refrigeration system.

Keep all ignition sources, including cigarette smoking, away from the site of installation, repair, removal or disposal, during which refrigerant can potentially be released to the surrounding space.

Survey the area around the equipment before initiating work to ensure no flammable hazards or ignition risks are present.

"No Smoking" signs shall be displayed.

Do not use devices that can be a source of ignition to accelerate defrosting of components. Use only defrost and cleaning procedures recommended by Trane. Do not pierce or burn.

Ventilation

Ensure that the area is in the open or that it is adequately ventilated before breaking into the system or conducting any hot work. A degree of ventilation shall continue during the period that the work is carried out. The ventilation should safely disperse any released refrigerant and preferably expel it externally into the atmosphere. If present, check that the ventilation system, including outlets, are operating adequately and are not obstructed.

Refrigerating Equipment

Refrigerant piping or components should not be installed in locations where substances which may corrode them are present.

Check that equipment hazard markings are visible and legible. Replace them if they are not.

For equipment using secondary fluids, like water or glycol, check that refrigerant is not present in the secondary fluid loop before conducting any hot work.

Electrical Devices

Do not apply power to the circuit if a fault exists which compromises safety. If the fault cannot be corrected immediately, but it is necessary to continue operation, an adequate temporary solution shall be used. This shall be reported to the owner of the equipment, so all parties are advised.

Initial safety checks shall include:

- Cabling is not subject to wear, corrosion, excessive pressure, vibration, sharp edges, or any other adverse environmental effects. Account for the effects of aging or continual vibration from sources such as compressors or fans.
- Capacitors are discharged. This shall be done in a safe manner to avoid possibility of sparking.
- No live electrical components and wiring are exposed while charging, recovering, or purging the system.
- Verify continuity of earth bonding.
- Replace electrical components with Trane replacement parts, or those meeting the same ratings and qualified for flame arrest protection, UL LZGH2 category.

Leak Detection

Never use an open flame to detect leaks. A halide torch should not be used. Use only approved leak detection methods per this instruction manual.

The following leak detection methods are deemed acceptable for all refrigerant systems.

Electronic leak detectors may be used to detect refrigerant leaks but, in the case of flammable refrigerants, the sensitivity may not be adequate, or may need re-calibration. (Detection equipment shall be calibrated in a refrigerant-free area.) Ensure that the detector is not a potential source of ignition and is suitable for the refrigerant used. Leak detection equipment shall be set at a percentage of the LFL gas (25% maximum) is confirmed.

Leak detection fluids are also suitable for use with most refrigerants but the use of detergents containing chlorine shall be avoided as the chlorine may react with the refrigerant and corrode the copper pipe-work.

Examples of leak detection fluids are:

- Bubble method
- Fluorescent method agents

If a leak is suspected, all naked flames shall be removed/ extinguished.

If a refrigerant leak is found which requires brazing, all refrigerant shall be recovered from the system, or isolated (by means of shut off valves) in a part of the system remote from the leak.

Refrigerant Removal and Evacuation

Ensure that the correct number of cylinders for holding the total system charge is available. All cylinders to be used are designated for the recovered refrigerant and labeled for that refrigerant (special cylinders for the recovery of refrigerant, for example). Cylinders shall be complete with pressure-relief valve and associated shut-off valves in good working order. Empty recovery cylinders are evacuated and, if possible, cooled before recovery occurs.

When breaking into the refrigerant circuit to make repairs – or for any other purpose – conventional procedures shall be used. However, for flammable refrigerants it is important that best practice be followed, since flammability is a consideration.

The following procedure shall be adhered to:

1. Safely remove refrigerant following local and national regulations.
2. Evacuate.
3. Purge the circuit with inert gas.
4. Evacuate (optional for A2L).
5. Continuously flush or purge with inert gas when using flame to open circuit.
6. Open the circuit.

Prior to refrigerant removal, open all appropriate valves, including solenoid and electronic expansion valves (EXVs). Use control settings, where available. When not available, manually open all electronically controlled valves using acceptable service procedures.

The recovery equipment shall be in good working order with instructions available. Equipment shall be suitable for the recovery of the flammable refrigerant. For specific handling concerns, contact the manufacturer. Ensure all hose connections are checked for tightness to avoid refrigerant leaks.

In addition, a set of calibrated weighing scales shall be available and in good working order.

The refrigerant shall be recovered into the correct recovery cylinders if venting is not allowed by local and national codes. Do not mix refrigerants in recovery unit and especially not in cylinders.

Refrigerant recovery unit should be purged with an inert gas after each use or before using with a different refrigerant Class – for example, A2L to A1.

If compressors or compressor oils are to be removed, ensure that they have been evacuated to an acceptable level to make certain that flammable refrigerant does not remain within the lubricant. The compressor body shall not be heated by an open flame or other ignition sources to accelerate this process. When oil is drained from a system, it shall be carried out safely.

The system shall be purged with oxygen-free nitrogen to render the appliance safe for flammable refrigerants. This process might need to be repeated several times. Compressed air or oxygen shall not be used for purging refrigerant systems.

The system shall be vented down to atmospheric pressure to enable work to take place.

The outlet for the vacuum pump shall not be close to any potential ignition sources, and ventilation shall be available.

Refrigerant Charging

In addition to conventional charging procedures, the following requirements shall be followed.

- Ensure that contamination of different refrigerants does not occur when using charging equipment.
- Hoses or lines shall be as short as possible to minimize the amount of refrigerant contained in them.
- Cylinders shall be kept in an appropriate position according to the instructions.
- Ensure that the refrigerating system is earthed prior to charging the system with refrigerant.
- Label the system when charging is complete (if not already).
- Extreme care shall be taken not to overfill the refrigerating system.

Prior to recharging the system, it shall be pressure-tested with the appropriate purging gas. The system shall be leak-tested on completion of charging but prior to commissioning. A follow up leak test shall be carried out prior to leaving the site.

Prior to refrigerant charging, open all appropriate valves, including solenoid and electronic expansion valves (EXVs). Use control settings, where available. When not available, manually open all electronically controlled valves using acceptable service procedures.

Verify the equipment refrigerant charge is in accordance with the room area limitation as described in Minimum Room Area Limits section.

Decommissioning

Before carrying out the decommissioning procedure, it is essential that the trained service personnel is completely familiar with the equipment and all its details. It is recommended good practice that all refrigerants are recovered safely. Prior to the task being carried out, an oil and refrigerant sample shall be taken in case analysis is required prior to re-use of recovered refrigerant. It is essential that electrical power is available before the task is commenced.

1. Become familiar with the equipment and its operation.
2. Isolate system electrically.
3. Before attempting the procedure, ensure that:
    a. Mechanical handling equipment is available, if required, for handling refrigerant cylinders.
    b. All personal protective equipment is available and being used correctly.
    c. The recovery process is supervised at all times by a competent person.
    d. Recovery equipment and cylinders conform to the appropriate standards.
4. Pump down refrigerant system, if possible.
5. If a vacuum is not possible, make a manifold so that refrigerant can be removed from various parts of the system.
6. Make sure that cylinder is situated on the scales before recovery takes place.
7. Start the recovery machine and operate in accordance with instructions.
8. Do not overfill cylinders (no more than 80% volume liquid charge).
9. Do not exceed the maximum working pressure of the cylinder, even temporarily.
10. When the cylinders have been filled correctly and the process completed, make sure that the cylinders and the equipment are removed from site promptly and all isolation valves on the equipment are closed off.
11. Recovered refrigerant shall not be charged into another refrigerating system unless it has been cleaned and checked.
12. When equipment has been decommissioned, attach a signed and dated label stating it has been decommissioned and emptied of refrigerant.
13. Ensure that there are labels on the equipment stating it contains flammable refrigerant.

A2L Application Considerations

This product is listed to UL standard 60335-2-40, Household and Similar Electrical Appliances – Safety – Part 2-40: Particular Requirements for Electrical Heat Pumps, Air-Conditioners and Dehumidifiers, which defines safe design and use strategies for equipment using A2L

refrigerants. This standard limits the refrigerant concentration in a space in the event of a refrigerant leak. To meet the requirements, the UL standard defines minimum room area, refrigerant charge limit, minimum circulation airflow and/or ventilation airflow requirements, and limits the use of ignition sources in spaces. The standard may require a unit refrigerant leak detection system.

For equipment with R-454B and charge amounts less than or equal to 3.91 lbs per circuit, this UL standard does not prescribe a room area limit and does not require a refrigerant leak detection system or any circulation airflow or ventilation airflow mitigation strategies. However, ignition sources in ductwork must be evaluated.

Depending on the application, a specific requirement of ANSI/ASHRAE Standard 15, Safety Standard for Refrigeration Systems, could be more stringent than UL 60335-2-40 requirements. See *Refrigeration Systems and Machinery Rooms Application Considerations for Compliance with ASHRAE® Standard 15-2022 Application Engineering Manual* (APP-APM001*-EN) for more information.

Ignition Sources in Ductwork

Do not install open flames in the ductwork. Hot surfaces exceeding 700°C (1290°F) should not be installed in the ductwork unless the average airflow velocity is not less than 1.0 m\s (200 ft\min) across the heater and proof of airflow is verified before system is energized.

Electric heaters can exceed the surface temperature limit if airflow distribution is poor, or insufficient airflow is provided over the heater.

Surface temperatures of most gas heaters do not exceed the surface temperature limits due to ANSI construction requirements.

Ignition Sources in Unit

This unit does not contain any ignition sources. All potential ignition sources, (including factory or field installed accessory electric heaters, gas heaters, relays, and contactors) were evaluated during product UL listing.

Minimum Room Area Limits (Refrigerant charge greater than 3.91 lb per circuit)

Equipment with R–454B charge amounts greater than 3.91 lb per circuit may require additional circulation or ventilation airflow mitigation strategies. In this case, two minimum room area (A_{min}) thresholds:

- The first threshold defines when equipment serving a single room is required to provide circulation airflow, either continuous or activated by a leak detection system. A ducted system requires circulation airflow unless the smallest room it serves is larger than the adjusted A_{min} threshold. This product contains a leak detection system if a circuit charge is greater than 3.91 lbs. As a result, no further leak detection system evaluation is required.
- The second threshold defines when additional ventilation airflow is required. If the room area, A or TA, is below the adjusted A_{min} or TA_{min} threshold, additional ventilation is required to remove refrigerant in the event of a leak. Refer to UL 60335-2-40 Clause GG.8 and ANSI\ASHRAE Standard 15 Section 7 for natural and mechanical ventilation requirements.

Table 6. Minimum room area

Model	Charge Range		Minimum Room Area	
	lbs	kg	ft²	m²
(T,Y)(S)K036	3.1-3.6	1.4-1.6	46.4-53.9	4.3-5
(T,Y)(H)K036	5.3–5.6	2.4–2.5	79.3–83.8	7.3–7.7
(T,Y)(S)K048	3.3-3.7	1.4-1.6	49.4-55.4	4.5-5.1
(T,Y)(H)K048	7.5–7.9	3.3–3.5	112.3–118.3	10.4–10.9
(T,Y)(S)K060	3.9-4.7	1.7-2.1	58.4-70.3	5.4-6.5
(T,Y)(H)K060	7.5–7.9	3.3–3.5	112.3–118.3	10.4–10.9
(T,Y)(S,H)K072	8-8.4	3.6-3.8	119.8-125.7	11.1-11.6
(T,Y)(S,H)K090	7.6-8.2	3.4-3.7	113.8-122.7	10.5-11.4
(T,Y)(S,H)K102	8.3-9.1	3.7-4.1	124.2-136.2	11.5-12.6
(T,Y)(S,H)K120	8-9	3.6-4	119.8-134.7	11.1-12.5
(T,Y)(S)K150	9.8-10	4.4-4.5	146.7-149.7	13.6-13.9
(T,Y)(H)K150	11.9-12.9	5.3-5.8	178.2-193.1	16.5-17.9

Table 6. Minimum room area (continued)

Model	Charge Range		Minimum Room Area	
	lbs	kg	ft^2	m^2
(T,Y)(S,H)K180	11.8-12.9	5.3-5.8	176.7-193.1	16.4-17.9
(T,Y)(S)K210	12-12.9	5.4-5.8	179.7-193.1	16.6-17.9
(T,Y)(H)K210	13.2-13.9	5.9-6.2	197.6-208.1	18.3-19.3
(T,Y)(S,H)K240	14-14.6	6.3-6.6	209.6-218.6	19.4-20.3
(T,Y)(S,H)K300	14.6-15.3	6.6-6.9	218.6-229.1	20.3-21.2

Minimum Room Area (A_{min}) Adjustments

Use equation below to adjust the minimum room area, as applicable, based on the unit's installation height, altitude, and occupancy level it serves.

$$A_{min.adj} = \text{Nameplate } A_{min} \times \text{Altitude Adj} \times \text{Height Adj} \times F_{occ}$$

Multiply the altitude adjustment factor in the table below by A_{min} listed on the unit nameplate or in the Installation, Operation, and Maintenance (IOM) manual.

Table 7. Altitude adjustment factor

Altitude (ft)	Sea Level to 2000	2001 to 4000	4001 to 6000	6001 to 8000	8001 to 10000	10001 to 12000	12001 to 14000	14001 to 15000	Over 15000
A_{min} Adjustment	1	1.05	1.11	1.17	1.24	1.32	1.41	1.51	1.57

In addition, A_{min} can be adjusted if the unit is installed in a room at a height that is higher than the minimum height shown on the unit. To adjust A_{min}, multiply by the ratio of the unit minimum release height (in meters) / actual release height (in meters). Use 0.6 m in the ratio for unit minimum installation heights less than or equal to 0.6 m.

For institutional occupancies, ASHRAE Standard 15 applies an additional adjustment factor F_{occ} to the amount of a charge allowed in a space. To calculate the adjusted A_{min} for institutional occupancies, multiply the A_{min} on the nameplate by two.

EXAMPLE 1: 20 Ton Packaged Rooftop Multi-Zone VAV System Serving an Institutional Occupancy Space

The packaged unit serves 7600 ft^2 of a nursing home located at an attitude of 4000 ft. The unit has two equally charged 10 ton refrigeration circuits. Each circuit has 12 lbs of refrigerant with a minimum room area requirement of 180 ft^2 with a 2.2 m release height.

$$TA_{min.adj} = 180\ ft^2 \times 1.05 \times 2 = 378\ ft^2$$

No additional ventilation is required.

EXAMPLE 2: 10 Ton Split System Serving a Single Commercial Occupancy Space

The split system serves a 1500 ft^2 manufacturing space at 5000 ft altitude. The final installed charge of the single circuit 10 ton unit is 20 lb. The unit has an open return with a release height of 1 m and ducted supply air. The unit A_{min} is 660 ft^2.

$$A_{min.adj} = 660\ ft^2 \times 1.11 = 733\ ft^2$$

No additional ventilation is required.

Determining Room Area (A or TA)

The room area (A) is the room area enclosed by the projection to the floor of the walls, partitions, and doors of the space that the equipment serves. For ducted systems, total room area (TA) of all rooms connected by ducts, may be used instead of A.

Rooms connected by drop ceilings only are not considered a single room.

Rooms on the same floor of the building, and connected by an open passageway, can be considered part of the same room if the passageway is a permanent opening, extends to the floor and is intended for people to walk through.

Adjacent rooms on the same floor of the building and connected by permanent openings in the walls and/or doors between rooms (including gaps between the wall and the floor), can be considered part of the same room if the openings meet the following criteria.

- The opening is permanent and cannot be closed.
- Openings extending to the floor, such as door gaps, need to be at least 20 mm above the floor covering surface.
- Natural ventilations opening areas must meet the requirements of ANSI\ASHRAE Standard 15-2022, Section 7.2.3.2.

Rooms that are connected by a mechanical ventilation system can be considered a single room area if the mechanical ventilation system meets the requirements of ANSI\ASHRAE Standard 15-2022, Section 7.6.4.

Leak Detection System (Refrigerant charge greater than 3.91 lb per circuit)

The leak detection system consists of one or more refrigerant detection sensors. When the system detects a leak, the following mitigation actions will be initiated until refrigerant has not been detected for at least 5 minutes:

- Energize the supply fan(s) to deliver a required minimum amount of circulation airflow.
- Disable compressor operation.
- Provide an output signal that can be used to fully open zone dampers and/or VAV boxes and disable electric heat in VAV boxes.
- Provide an output signal that can be used to energize additional mechanical ventilation (if needed).
- Units without airflow proving will disable electric heat sources.

Building fire and smoke systems may override this function.

If the refrigerant sensor has a fault, is at the end of its life, or is disconnected, the unit will initiate the mitigation actions. Mitigation actions may be verified by disconnecting the sensor.

The refrigerant sensors do not need service. Use only manufacturer-approved sensors when replacement is required.

Installation

⚠ WARNING

Heavy Object!

Failure to follow instructions below could result in unit dropping which could result in death or serious injury, and equipment or property-only damage.

Ensure that all the lifting equipment used is properly rated for the weight of the unit being lifted. Each of the cables (chains or slings), hooks, and shackles used to lift the unit must be capable of supporting the entire weight of the unit. Lifting cables (chains or slings) may not be of the same length. Adjust as necessary for even unit lift.

NOTICE

Roof Damage!

System contains oil and refrigerant under high pressure. Roofs should be protected from exposure to oils and refrigerant in the system. If rooftop is not protected, damage to the roof may occur.

Important: *Refer to local building codes for proper installation. All installation must comply with local building codes.*

Horizontal Units

If the unit is installed at ground level, elevate it above the snow line. Provide concrete footings at each support location with a **full perimeter** support structure or a slab foundation for support. Refer to the weights information in the Dimensions and Weights chapter for unit operating and point loading weights when constructing a footing foundation.

If anchoring is required, anchor the unit to the slab using hold down bolts or isolators. Isolators should be installed to minimize the transmission of vibrations into the building.

⚠ WARNING

Risk of Roof Collapsing!

Failure to ensure proper structural roof support could cause the roof to collapse, which could result in death or serious injury and property damage.

Confirm with a structural engineer that the roof structure is strong enough to support the combined weight of the roofcurb, the unit, and any accessories.

For rooftop applications, confirm the roof is strong enough to support the combined unit and support structural weight. Refer to unit and corner weights (center of gravity) dimensions in the Dimensions and Weights section for the unit operating weights. If anchoring is required, anchor the unit to the roof with hold-down bolts or isolators.

Check with a roofing contractor for proper waterproofing procedures.

Ductwork

Supply and return air openings as viewed from the rear of the unit are shown in the following drawings.

Figure 38. A.0 cabinet – horizontal airflow supply/ return

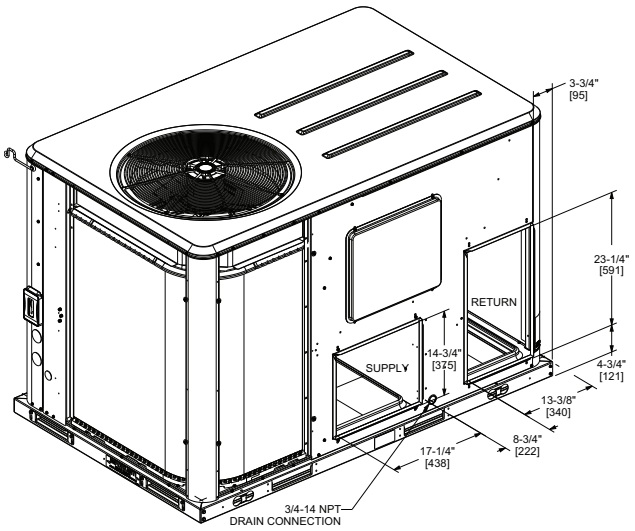

Figure 39. B.0 cabinet – horizontal airflow supply/ return

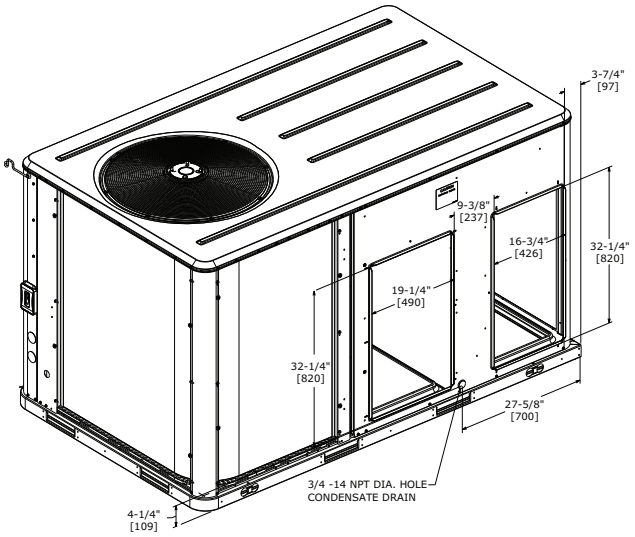

Figure 40. C.0 cabinet – horizontal airflow, supply and return

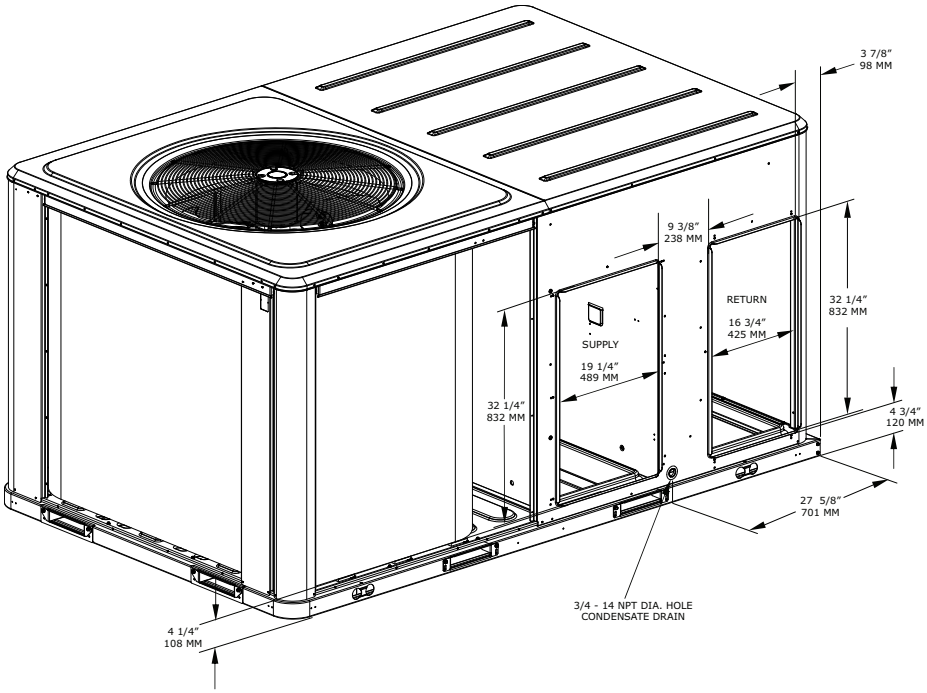

Figure 41. D.0 and D.1 cabinets – horizontal airflow, supply and return

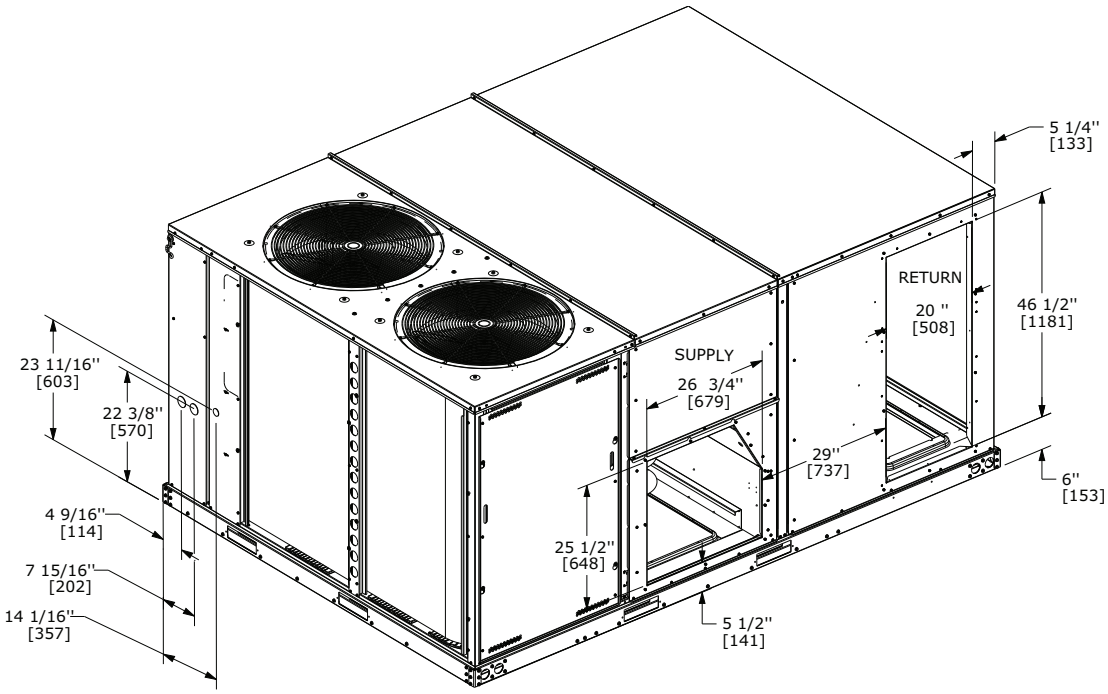

Supply and return air openings as viewed from a downflow configuration are shown in the following drawings.

Elbows with turning vanes or splitters are recommended to minimize air noise due to turbulence and to reduce static pressure.

When attaching the ductwork to the unit, provide a water tight flexible connector at the unit to prevent operating sounds from transmitting through the ductwork.

To allow access for fan and fresh air option servicing, do not attach ductwork over panel above the supply opening.

All outdoor ductwork between the unit and the structure should be weather proofed after installation is completed.

Figure 42. A.0 cabinet – high efficiency

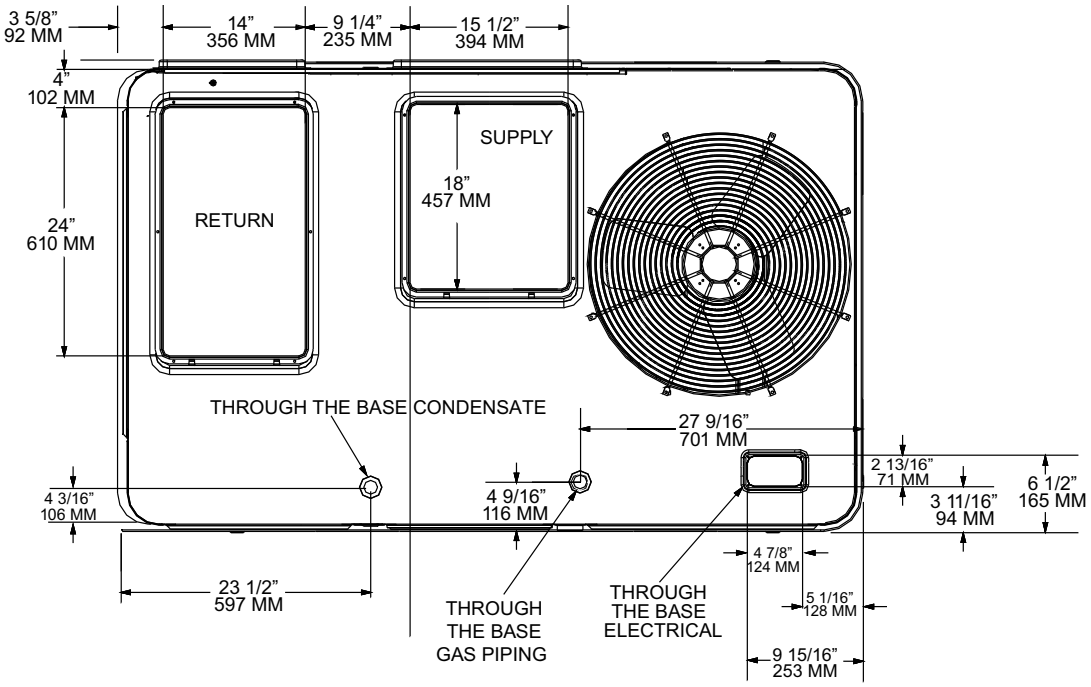

Figure 43. B.0 cabinet

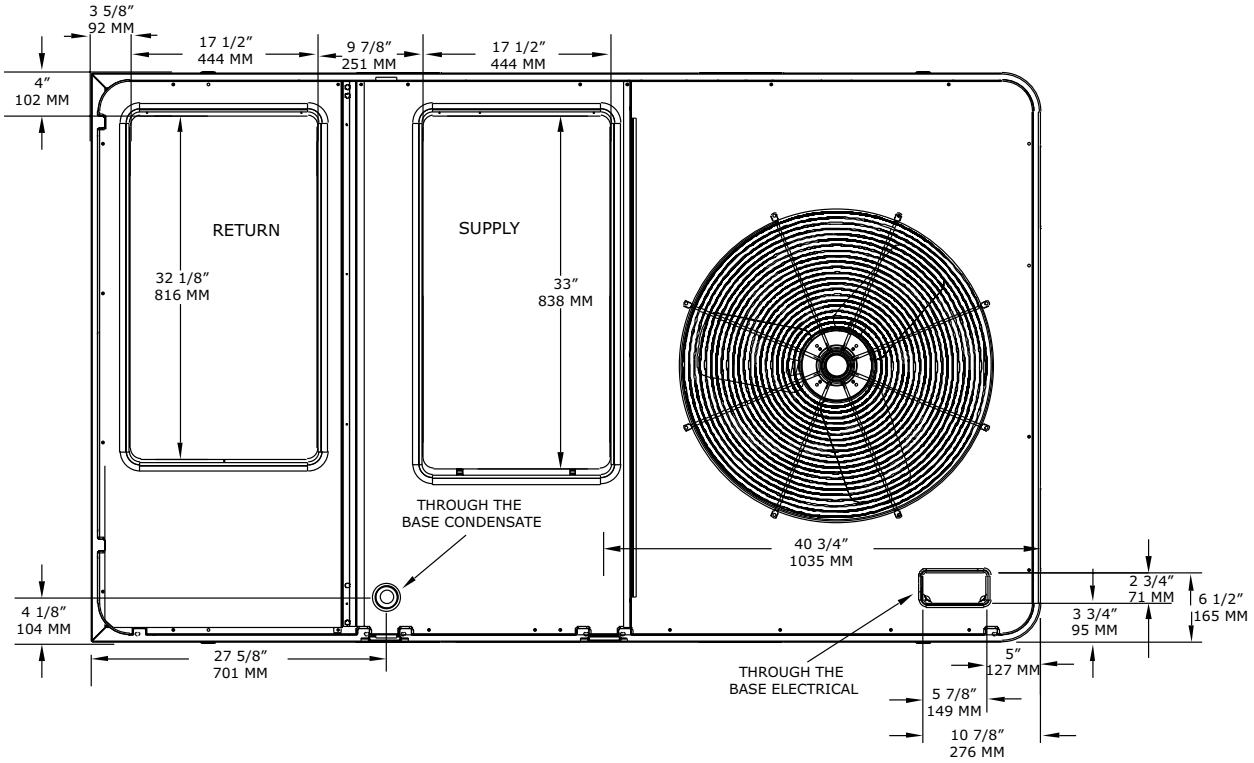

Figure 44. C.0 cabinet

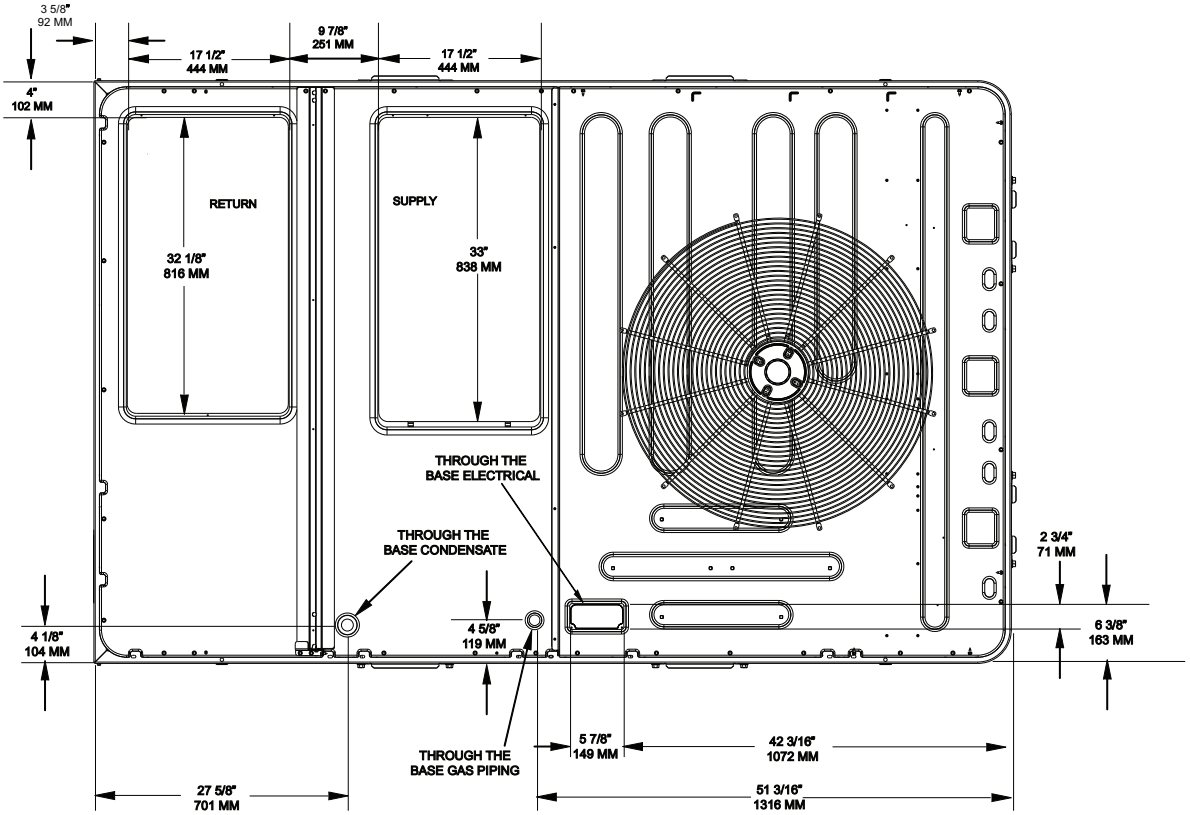

Figure 45. D.0 and D.1 cabinets – downflow airflow supply/return, through-the-base utilities

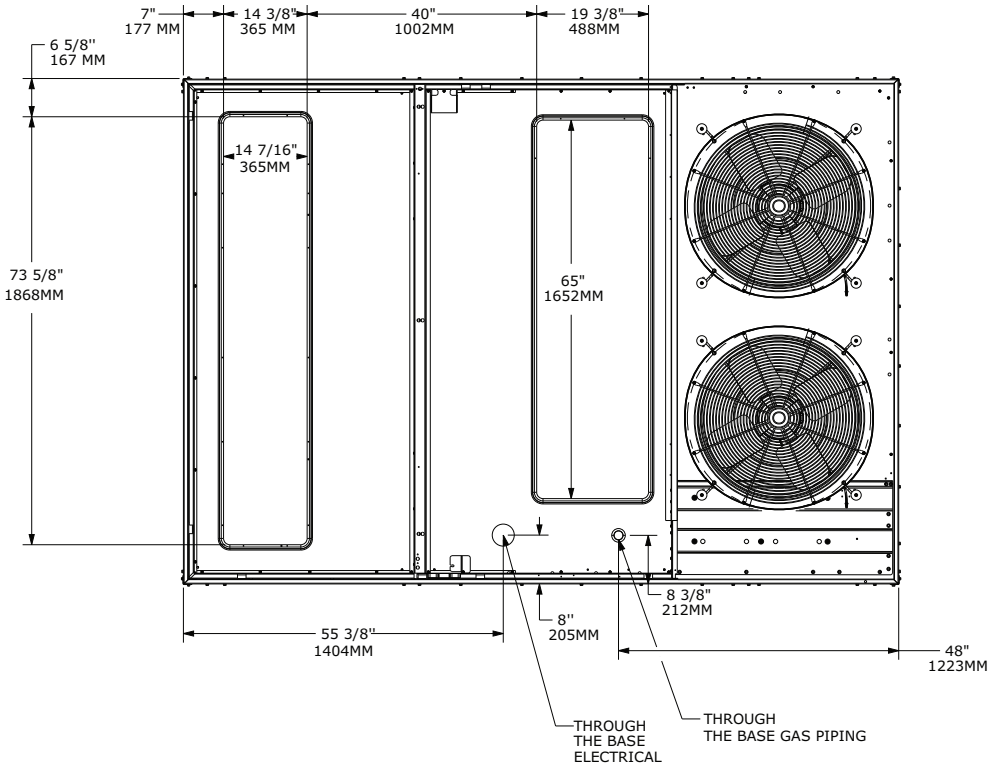

Note: *No minimum clearance is required from duct to combustible surfaces.*

Roof Curb

Downflow

The roof curbs for these units consists of a **full perimeter** enclosure to support the unit just inside of the unit base rail. The C.0 cabinet units contain a support base alignment rail and will extend past the end of the roof curb.

Before installing the roof curb, verify:

- It is the correct curb for the unit.
- Necessary gaskets and hardware are available.
- Confirm required clearance for installation and operation.
- The curb should be level and square. The top surface of the curb must be level in order to confirm an adequate curb to unit seal.

⚠ WARNING

Combustible Materials!

Failure to maintain proper clearance between the unit and combustible materials could cause a fire which could result in death, serious injury, or property damage.
Refer to unit nameplate and installation instructions for proper clearances.

Verify that appropriate materials were used in the construction of roof and ductwork. Combustible materials should not be used in the construction of ductwork or roof curb that is in close proximity to heater elements or any hot surface. Any combustible material on the inside of the unit base should be removed and replaced with appropriate material.

Step-by-step curb assembly and installation instructions ship with each accessory roof curb kit. Follow the instructions carefully to confirm proper fit-up when the unit is set into place.

Note: *To verify proper condensate flow during operation, the unit (and curb) must be level.*

If the unit is elevated, a field constructed catwalk around the unit is strongly recommended to provide easy access for unit maintenance and service.

Recommendations for installing the supply air and return air ductwork joining the roof curb are included in the curb installation instructions. Curb ductwork must be fabricated and installed by the installing contractor before the unit is set into place.

Important: *For sound consideration, cut only the holes in the roof deck for the ductwork penetrations. Do not cut out the entire roof deck within the curb perimeter.*

Note: *C.0 units can be installed on B.0 (50 in. x 84 in.) roof curbs with the use of factory-installed base alignment brackets. These brackets create a 10-inch overhang on the front of the unit. See for installation on the B.0 (50 in. x 84 in.) curb and for installation on the C.0 (60 in. x 84 in.) curb.*

Figure 46. View for base to roof curb alignment on C.0 cabinet on a 50 in. x 84 in. roof curb

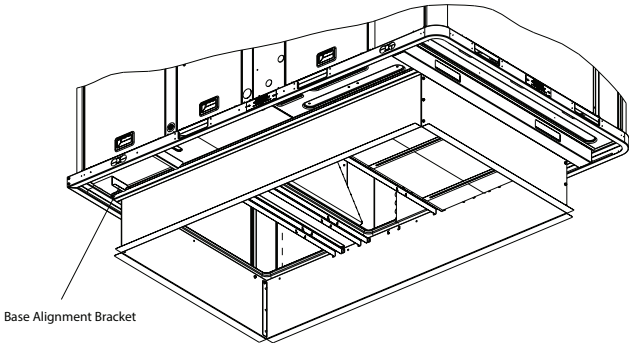

Figure 47. View for base to roof curb alignment on C.0 cabinet on a 60-in. x 84-in. roof curb

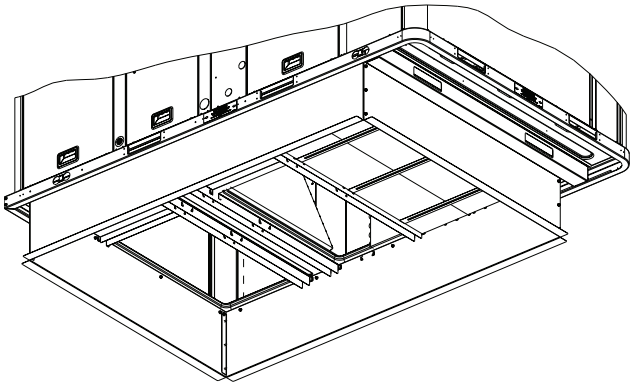

If a curb accessory kit is not used:

- The ductwork can be attached directly to the factory-provided flanges around the unit supply and return air openings. Use flexible duct connections at the unit.
- For **built up** curbs supplied by others, gaskets must be installed around the curb perimeter flange and the supply and return air opening flanges.

Rigging

⚠ WARNING

Heavy Object!

Failure to follow instructions below could result in unit dropping which could result in death or serious injury, and equipment or property-only damage.

Ensure that all the lifting equipment used is properly rated for the weight of the unit being lifted. Each of the cables (chains or slings), hooks, and shackles used to lift the unit must be capable of supporting the entire weight of the unit. Lifting cables (chains or slings) may not be of the same length. Adjust as necessary for even unit lift.

See Dimensions and Weights section for rigging illustration, and center-of-gravity dimensional data. Refer to the typical unit operating weights table before proceeding.

1. Confirm unit does not need additional moves by fork lift.
2. Prepare unit for rigging as follows:
   - For A.0, B.0 and C.0 cabinet units: remove all drill screws fastening wood protection to metal base rail. Remove all screws securing wooden protection to wooden top crate.
   - For D.0 and D.1 cabinet units: remove the front and side base rail bumper protection.

   Important: *For unit protection, the top crate should remain in place during lifting. If it must be removed prior to lifting, protect unit from damage. Top crate must be removed prior to operation.*

⚠ WARNING

Improper Unit Lift!

Failure to properly lift unit in a LEVEL position could result in unit dropping and possibly crushing operator/technician which could result in death or serious injury, and equipment or property-only damage.

Test lift unit approximately 24 inches (61 cm) to verify proper center of gravity lift point. To avoid dropping of unit, reposition lifting point if unit is not level.

3. Rig the unit as shown in the weights section. Attach adequate strength lifting slings to all four lifting brackets in the unit base rail. Do not use cables, chains, or slings except as shown.
4. Install a lifting bar, as shown in the Dimensions and Weights chapter, to protect the unit and facilitate a uniform lift. The minimum distance between the lifting hook and the top of the unit should be 7 feet.
5. Test-lift the unit to confirm it is properly rigged and balanced, make any necessary rigging adjustments.

Figure 48. Fork pockets — A.0 and B.0 cabinets

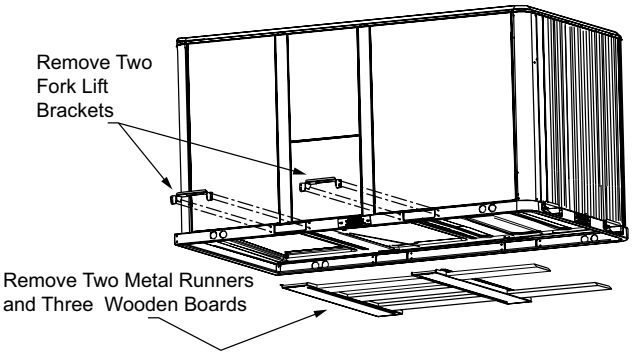

Figure 49. Fork pockets — C.0 cabinet

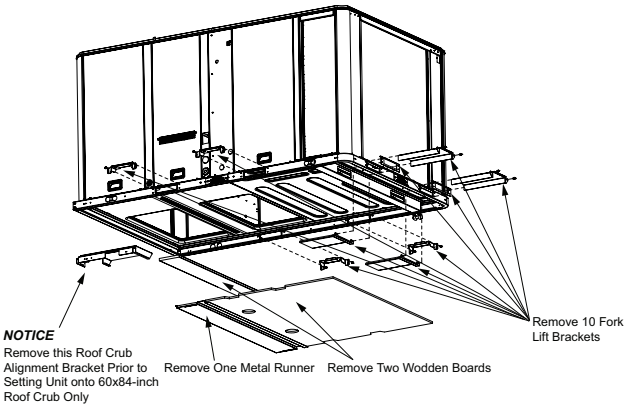

Figure 50. Fork pockets — D.0 and D.1 cabinets

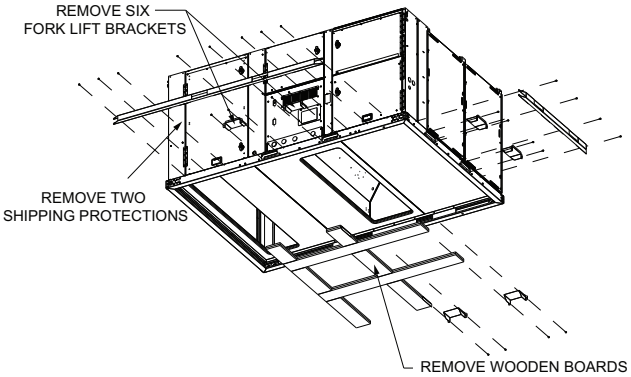

6. Lift the unit enough to allow the removal of base fork pocket protection components.
   - When C.0 cabinet units are installed on a smaller existing roof curb (50-inch x 84-inch) for replacement applications, do not remove alignment bracket. Use the bracket to properly align duct openings.

   Note: *See table in dimensions section for cabinet sizes.*
7. Downflow units: Align the base rail of the unit with the curb rail while lowering the unit onto the curb. Confirm the gasket on the curb is not damaged while positioning the unit.

General Unit Requirements

The following checklist is a summary of the steps required to successfully install a commercial unit. Installers should use this checklist to validate what is required in the installation process. It does not replace the detailed instructions called out in the applicable sections of this manual.

- ☐ Check the unit for shipping damage and material shortage. File a freight claim and notify appropriate sales representative.
- ☐ Verify correct model, options, and voltage from unit nameplate.
- ☐ Verify the installation location of the unit will provide the required clearance for proper operation.
- ☐ Assemble and install the roof curb (if applicable). Refer to the latest version of the curb installation instructions that ships with each curb kit.
- ☐ Fabricate and install ductwork. Secure ductwork to curb.
- ☐ If applicable, install pitch pocket for power supply through building roof.
- ☐ Rig the unit.
- ☐ Set the unit on the curb and verify the unit is level.
- ☐ Confirm unit-to-curb seal is tight, without buckles or cracks.
- ☐ Install and connect a condensate drain line to the evaporator drain connection.

Factory Installed Economizer

- Confirm the economizer has been pulled out into the operating position. Refer to the *Low Leak Economizer Precedent™ Packaged Rooftop Units 6 to 25 Tons with Symbio™ Installation Instructions* (ACC-SVN264*-EN) and *Economizer Precedent™ Packaged Rooftop Units with Symbio™ Controls Installation Instructions* (ACC-SVN261*-EN) for proper position and setup.
- Install all access panels.

External Vent Hood Installation

Note: *This procedure applies to D.0 and D.1 cabinet gas heat models.*

1. Remove and discard the cover plate located on the gas heat panel.

   Important:

   - *Read the label located on the cover plate before discarding.*
   - *Do not discard the fastening screws! They will be needed to install the vent hood.*

Figure 51. Discard cover plate

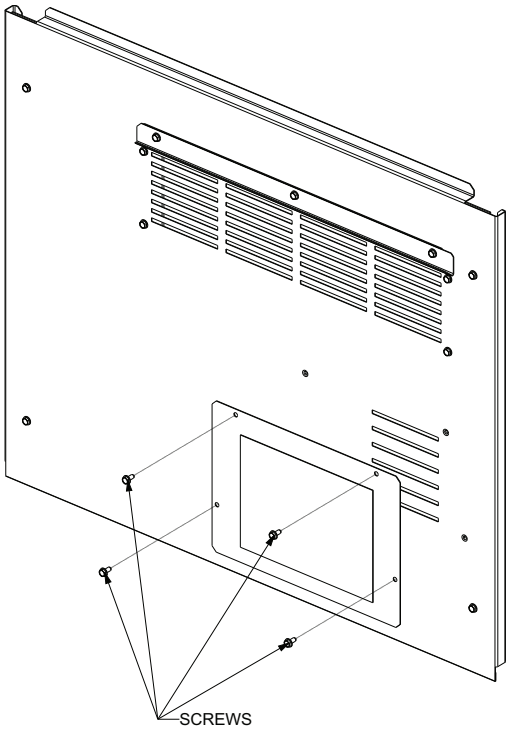

2. Locate the vent hood behind the panel.

Figure 52. Vent hood shipping location

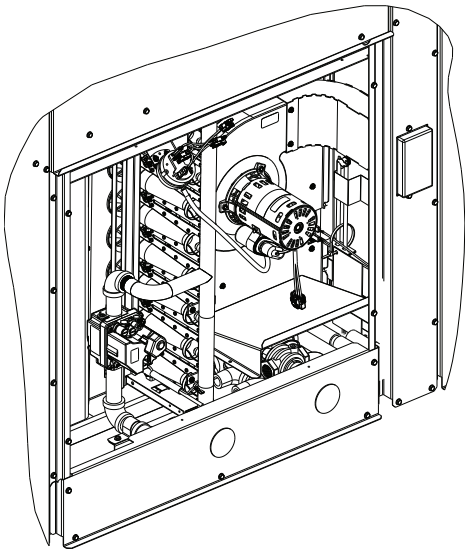

Note: *The above figure shows two-stage gas. Modulating gas is similar.*

3. Install the vent hood on the gas heat panel using the screws removed in Step 1 and secure to the panel.

Figure 53. Vent hood installation

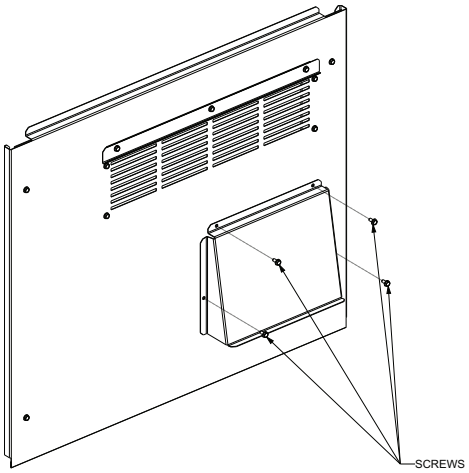

Horizontal Discharge Conversion (A.0 Cabinet Units)

Note: *On A.0 cabinets, use supply duct cover on supply opening and return duct cover on return opening.*

Supplies needed by installer for conversion: 3 oz. tube of high temperature RTV sealant. (500°F / 260°C: similar to Dow Corning 736).

Important: *Failure to use recommended sealant could result in unit performance loss.*

If a unit is to be converted to a horizontal discharge, the following conversion must be performed:

1. Remove **RETURN** and **SUPPLY** duct covers.
2. Locate supply cover. Apply ¼ in. (6mm.) continuous bead of 500°F RTV sealant to the flange as shown.

Figure 54. Supply duct cover

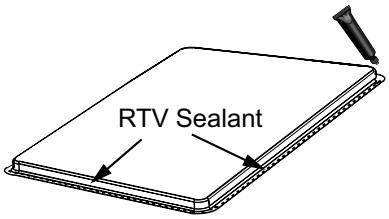

3. Position duct cover as shown, rotate 90 degrees to allow entrance into supply opening.
4. Slide duct covers into duct openings (insulation side up) until inward edge of duct cover engages with the 2 retaining clips on the duct flanges. Secure the outward edge of each duct cover with 2 screws.
5. After completing installation of the duct covers for horizontal discharge, proceed to TCO1 instructions.

Horizontal Discharge Conversion (B.0 and C.0 Cabinet Units)

Note: *B.0 and C.0 cabinet units move the supply cover to return opening and return cover to supply opening.*

Supplies needed by installer for conversion: 3 ounce tube of high temperature RTV sealant (500°F / 260°C, similar to Dow Corning 736).

Note: *Failure to use recommended sealant could result in unit performance loss.*

If a unit is to be converted to a horizontal discharge, the following conversion must be performed:

1. Remove **RETURN** and **SUPPLY** duct covers.
2. Place **SUPPLY DUCT COVER** over downflow return opening (insulation side down).
3. Using self-drilling screws, (or screws removed from duct cover), screw through dimples to attach **DUCT COVER** to base.

Figure 55. Supply duct cover

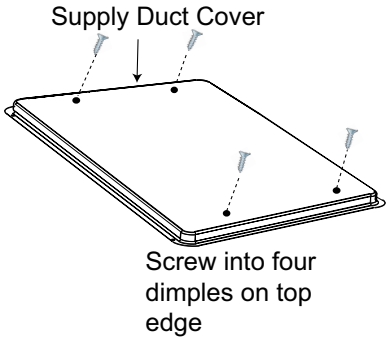

4. On original **RETURN DUCT COVER**, apply ¼-inch (6 mm.) continuous bead of 500°F RTV sealant around flange (opposite insulation side), as shown.

Figure 56. Return duct cover

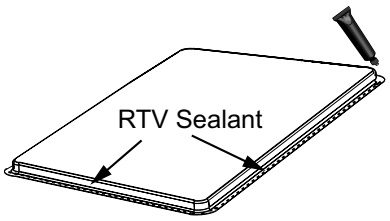

5. Return duct cover (insulation side up) into supply opening.
   a. Slide each duct cover in until inward edge of duct cover engages with the two retaining clips on the duct flange.
   b. Secure outward edge of the duct cover with two screws.

Notes:

- *If unit is equipped with Return Air Smoke Detector, refer to field conversion instructions for horizontal discharge before installing return air duct.*
- *If unit is equipped with Discharge Air Sensing option refer to the following section for proper tube positioning based on unit supply duct orientation / tonnage or see Discharge Air Sensing Kit Precedent™ Packaged Rooftop Units Installation Instructions (ACC-SVN240*-EN) for more details.*

Figure 57. Supply and return opening

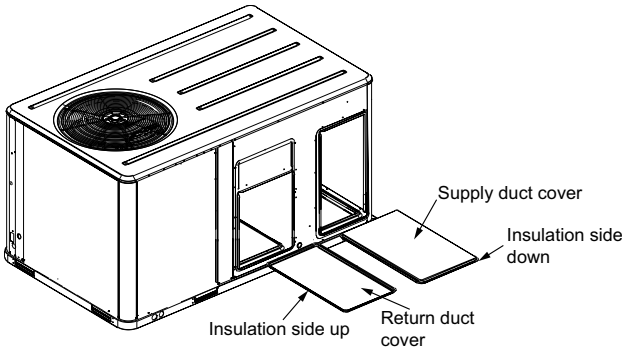

6. After completing installation of the duct covers for horizontal discharge, proceed to TCO-1 instructions (two-stage gas only).

Horizontal Discharge Conversion (D.0 and D.1 Cabinet Units)

D.0 and D.1 cabinet units require purchase of FIAHZDC001* Horizontal Duct Conversion Kit. See included installation instructions for conversion.

DAS Horizontal Conversions (Select Modulating Gas Heat Units)

For units with model number digit 10 = B, DAS system conversion may be required:

- 6 to 12.5 ton units in B and C cabinets (with model number digit 10 = B): conversion required to the DAS pickup tubes for horizontal duct configurations.
- 12.5 to 25 ton units in D cabinet (with model number digit 10 = B): no conversion required. The factory-installed DAS system is applicable to both downflow and horizontal.

6 Ton Low Modulating Gas Heat

Y(S/H)K072*BL**

Note: *An elbow is not required for this conversion.*

1. Remove the vertical slide bracket screw.
2. Slide the vertical slide bracket down to expose the holes in the vertical tube. See Figure 58, p. 49, Figure 59, p. 49, and Figure 60, p. 50.
3. Reattach bracket screw to secure vertical slide bracket in new position.

Figure 58. DAS tubing factory installation for downflow

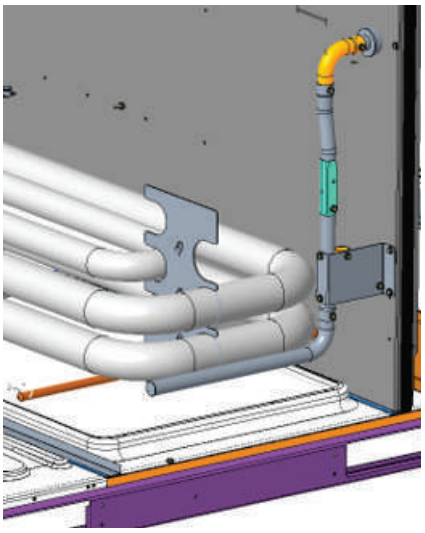

Figure 59. DAS tubing after conversion to horizontal

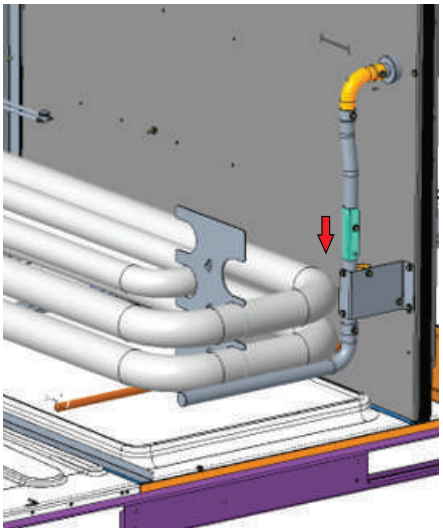

Figure 60. Detail view of DAS tubing after converting to horizontal

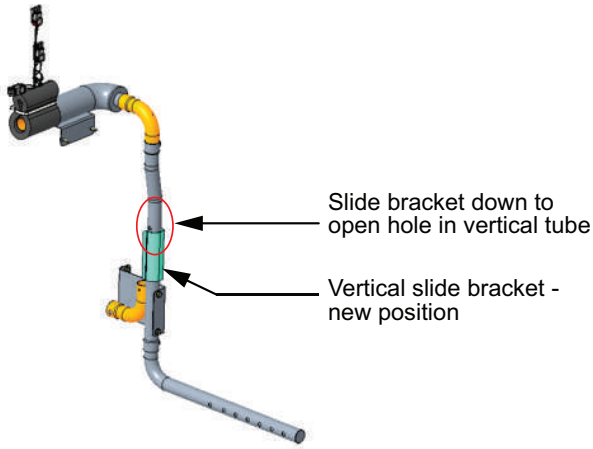

6 Ton High Modulating Gas Heat and 7.5 to 12 Ton All Modulating Gas Heat

6 ton high modulating gas heat: Y(S/H)K072***BH

7.5 to 12 ton all modulating gas heat: Y(S/H)K(090-150) ***B(L,H)

The figures shown below are representative. The heat exchanger size and discharge air tube geometry may vary with unit configuration. Any variations do not affect the conversion process.

Figure 61. DAS tubing factory installation for downflow

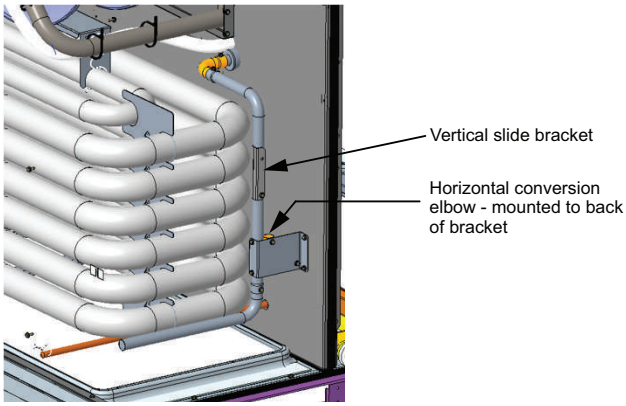

Figure 62. DAS tubing detail view (downflow)

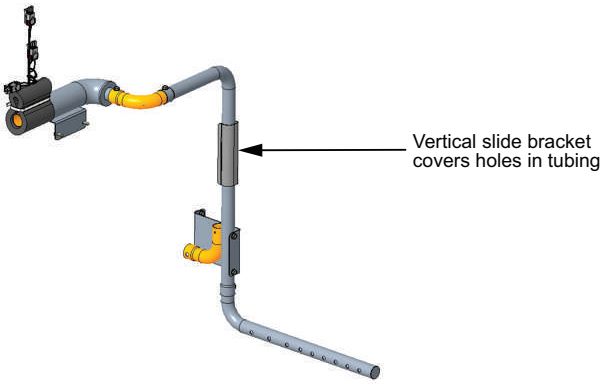

1. Reposition vertical slide bracket.
   a. Remove bracket screw.
   b. Slide the bracket down to expose the holes in the vertical tube. See Figure 63, p. 50, Figure 64, p. 51, and Figure 65, p. 51.
2. Reattach bracket screw to secure vertical slide bracket in new position.
3. Remove elbow from support bracket.
4. Remove pickup tube from vertical tube.
5. Install the 90 degree elbow shown in Figure 64, p. 51.
6. Reposition the pickup tube shown in Figure 64, p. 51.

Important: *To prevent stripping, do not over-tighten the attachment screws.*

Figure 63. DAS tubing conversion components

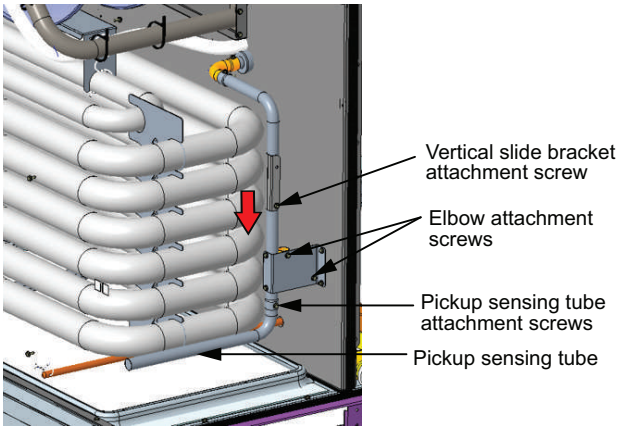

Figure 64. DAS tubing after conversion to horizontal

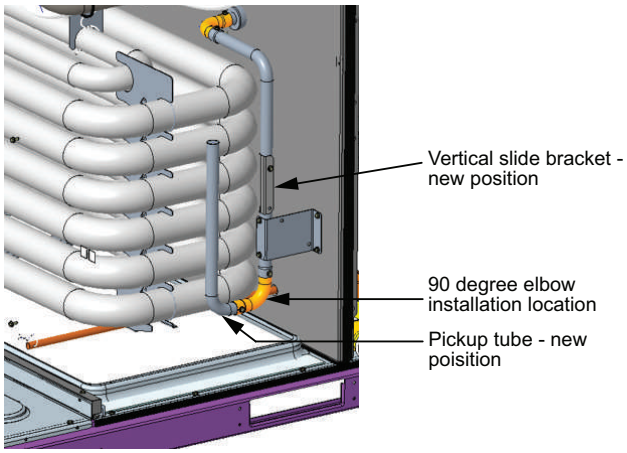

Figure 65. DAS tubing after conversion to horizontal - detail

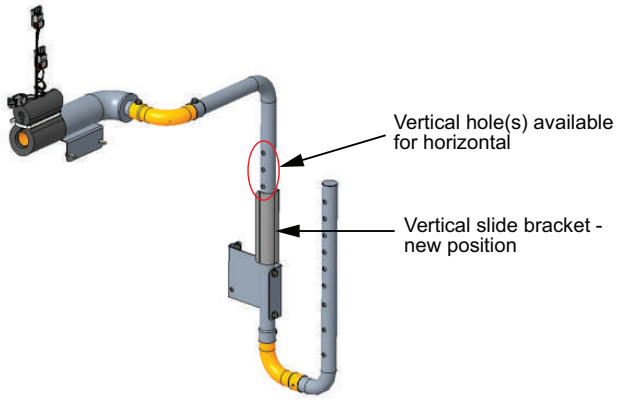

B Cabinet 3 to 5 Ton Standard and High Efficiency Heat Pump

This procedure applies to Models YSK (048, 060) and YHK (036, 048, and 060).

To convert from a Downflow DAS setup to a Horizontal DAS setup, do the following:

1. Remove the bracket screw. See .
2. Slide the bracket up to cover all the vertical holes. The number of holes on the vertical leg will vary depending on unit heat level. See , , and .
3. Re-attach the bracket screw into the new position.

B Cabinet 3 to 5 Ton High Efficiency Heat Pump Units with the Ultra-Low NOx Gas Furnace Option

This procedure applies to Models DHK (036, 048, and 060) A**CL.

To convert from a Downflow DAS setup to a Horizontal DAS setup, do the following:

1. Remove the bracket screw. See Figure 66, p. 51.
2. Slide the bracket downward to expose all seven vertical holes. See Figure 67, p. 51 and Figure 68, p. 52.
3. Re-attach the bracket screw into the new position.

Figure 66. DAS factory tubing for downflow — Ultra-Low NOx gas heat

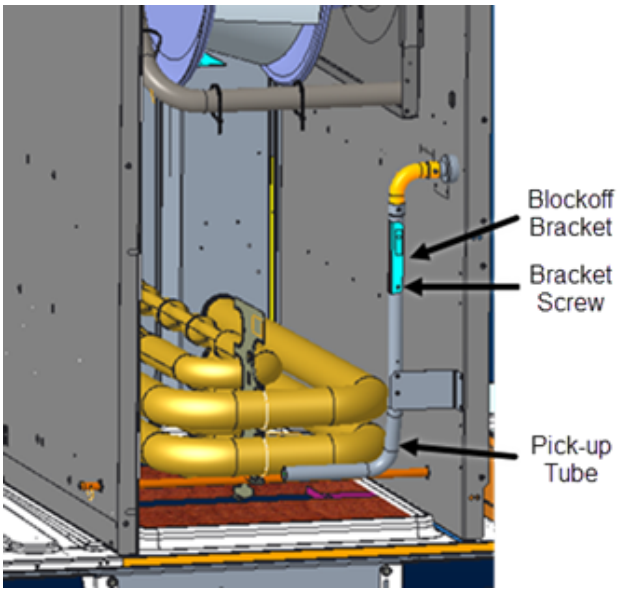

Figure 67. DAS tubing after conversion to horizontal

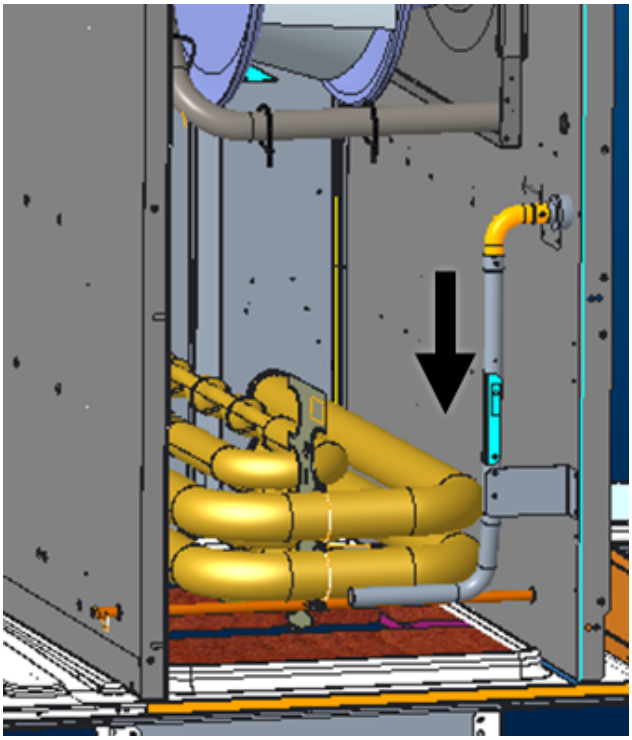

Figure 68. Holes on the vertical leg of the pick-up tube that are exposed for horizontal configuration

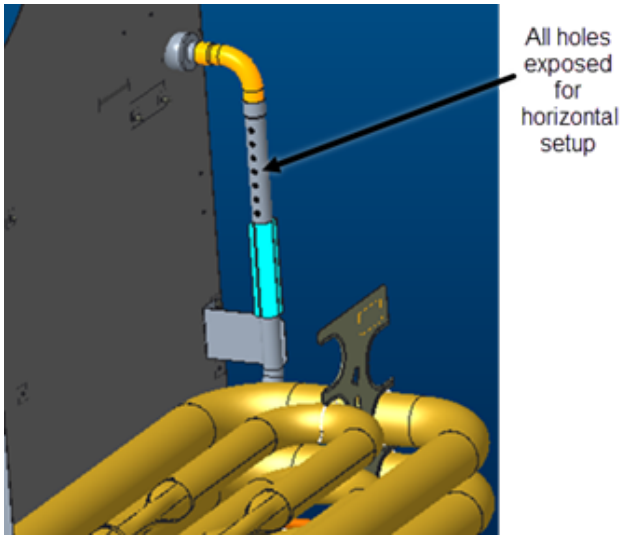

TCO1 Instructions

Note: *For complete Gas Heat User information, Operation, Start-up, Shutdown, and Maintenance refer to* *"Gas Heat Operation and Maintenance," p. 88.*

If the unit to be installed in horizontal configuration has a TCO1 tripping value different from the downflow configuration, replace TCO1 with the extra TCO1 limit switch shipped in the unit heater compartment as follows. If replacement is not required, no further action is required for TCO1.

1. Remove the heat section access panel.
2. Remove TCO1 from shipping location, which is attached to the combustion blower motor.
3. Replace and discard the existing TCO1 originally installed at the factory for down flow operation with the TCO1 shipped which is shipped with the unit for horizontal operation.
4. Replace heat section access panel.

Figure 69. TCO1 instructions – A.0 cabinet

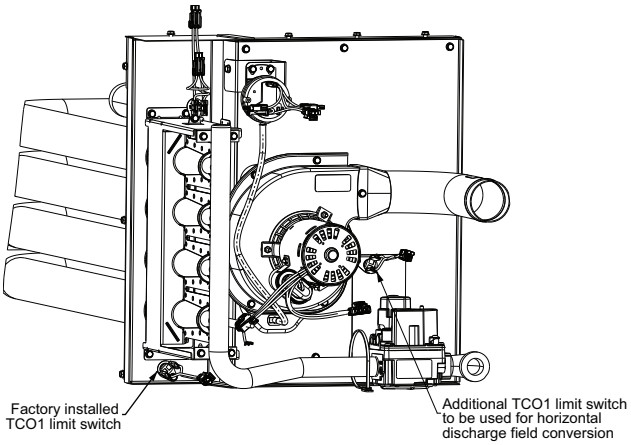

YSK(036-060)* and YHK036* - two stage gas heater

Note: *The TCO1 switch is attached by two screws in the location shown. The switch has short legs on it so use caution when sliding out of vestibule face during removal.*

Figure 70. TCO1 instructions – B.0/C.0 cabinet

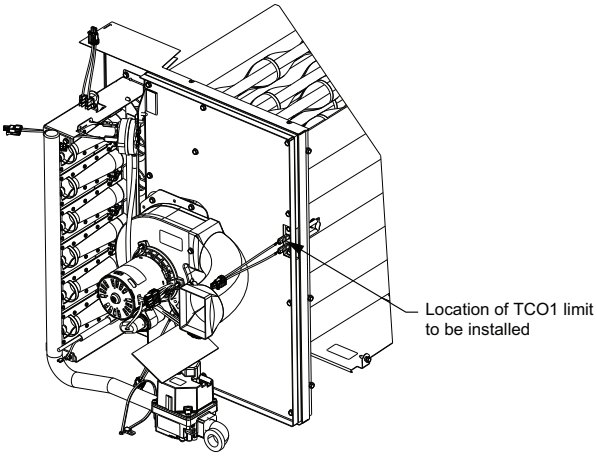

YHK(048-060)*, Y(S,H)K(072-120)* and YSK150* - two stage gas heater

Figure 71. TCO1 instructions – D.0/D.1 cabinet

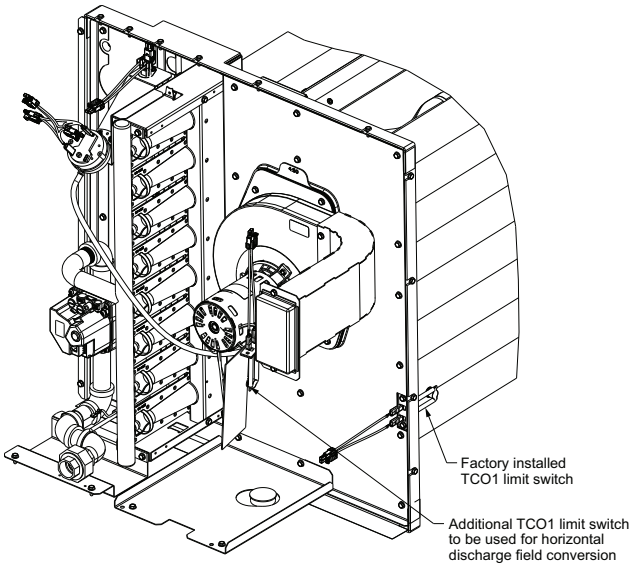

YHK150* and Y(S,H)K(180-300)* - two stage gas heater

Return Air Smoke Detector

A.0, B.0, and C.0 Cabinet Units

The factory installed Return Air Smoke Detector is installed in the downflow discharge position. No additional field setup is required.

If a unit is to be converted to Horizontal discharge, the following conversion must be performed:

1. If the unit has an economizer, it must be pulled out in the operating position.
2. Remove the three screws from the mounting brackets. Refer to downflow view for screw locations.

Figure 72. Downflow view

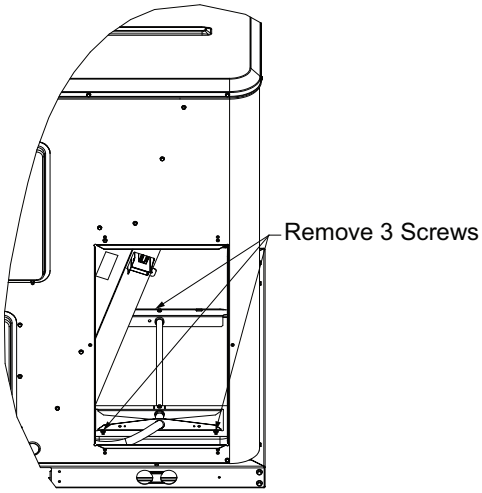

3. Lift the tube and bracket from the downflow duct opening. Rotate the tube and bracket assembly 180 degrees, and confirm that the holes on the sensing tube face away from the unit and face the return air ductwork.

   Notes:

   - *Refer to horizontal views below.*
   - *Confirm that the flexible tubing lies flat on the base pan surface.*

4. Slide the top bracket down the sensing tube. Secure right side of the bracket to the middle duct cover screw hole shown in Figure 73, p. 53. For B.0 and C.0 cabinets, secure the left side of bracket with self tapping screw.
5. Using the remaining two screws removed in Step 2, secure the bottom bracket.

Figure 73. Horizontal view

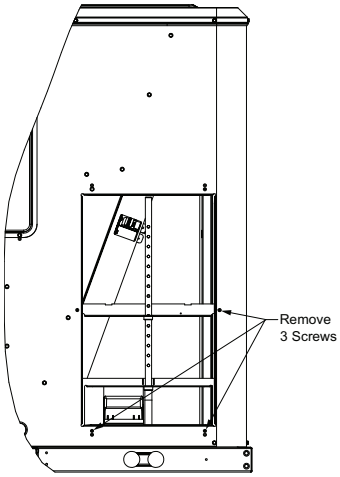

D.0 and D.1 Cabinet Units

The factory installed return air smoke detector is installed in the downflow discharge position for D.0 and D.1 cabinet units. No additional field setup is required.

If a unit is to be converted to horizontal discharge, the following conversion must be performed.

1. If the unit has an economizer, it must be pulled out in the operating position.
2. Remove the two screws from the mounting brackets.

Figure 74. Downflow bracket installation (view from horizontal return duct)

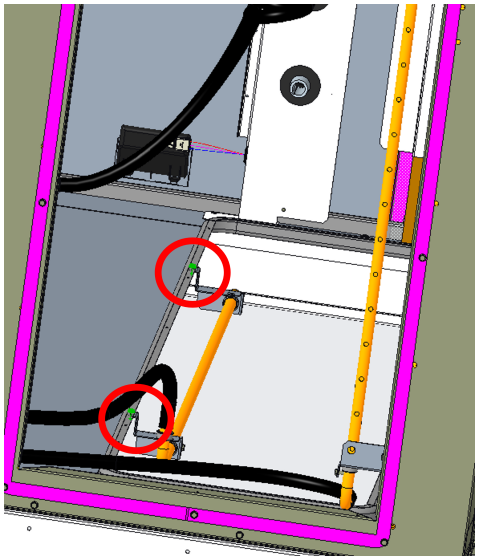

3. Lift the tube and bracket from the downflow duct opening. Rotate the tube and bracket assembly 90 degrees and confirm the holes on the aluminium sensing tube face away from the unit and face the return air ductwork.

Figure 75. Horizontal bracket installation (top view of unit)

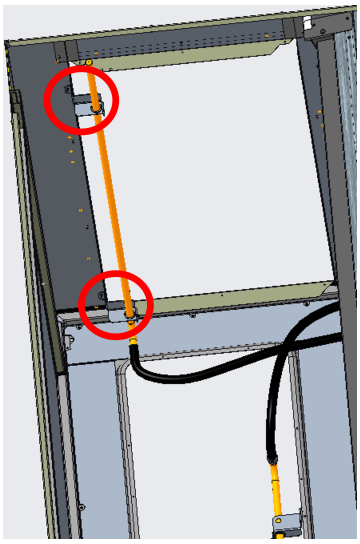

Note: *Flexible tubing should lay flat on the base pan surface.*

4. Slide the top bracket down the aluminium sensing tube.
   - For units with standard or low leak economizers, secure the tube to the top right side of the horizontal opening flange (right side when viewed from outside unit facing horizontal supply). See Figure 76, p. 54.

Figure 76. Horizontal bracket installation (view from horizontal return duct)

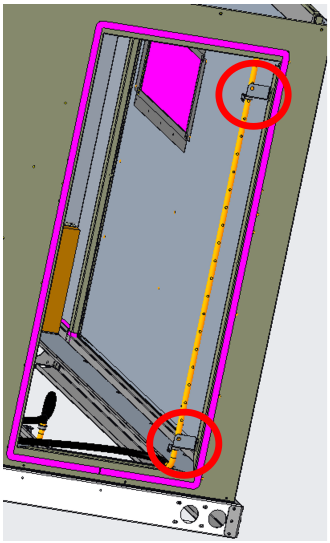

5. Use the remaining two screws and bracket removed in Step 2, secure the bottom bracket.

Air-Fi® Wireless Communication Interface

The factory installed wireless communications interface is installed in the downflow discharge position.

If converting to horizontal discharge, perform the following:

1. If the unit has an economizer, it must be pulled out in the operating position.
2. Remove the screw from the mounting bracket. Refer to downflow view for screw and bracket location.

Figure 77. Wireless communication interface - downflow

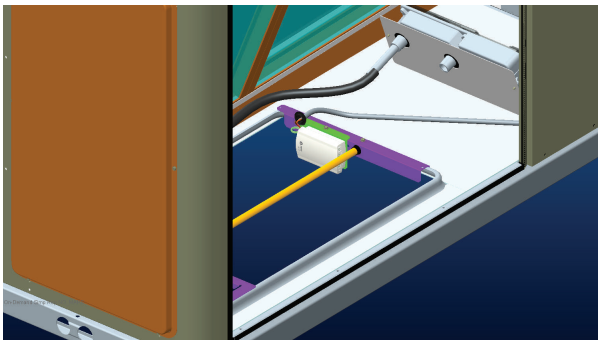

3. Mount the bracket in the horizontal discharge location. Refer to horizontal view for screw and bracket location.

Figure 78. Wireless communication interface - horizontal

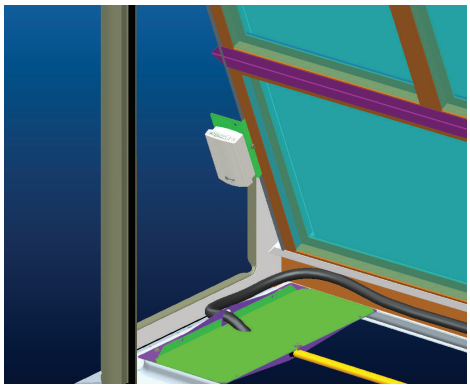

Note: *Cable ties must be removed to allow the cable to extend to the horizontal mounting location.*

Main Electrical Power Requirements

⚠ WARNING

Hazardous Voltage w/Capacitors!

Failure to disconnect power and discharge capacitors before servicing could result in death or serious injury.

Disconnect all electric power, including remote disconnects and discharge all motor start/run capacitors before servicing. Follow proper lockout/tagout procedures to ensure the power cannot be inadvertently energized. For variable frequency drives or other energy storing components provided by Trane or others, refer to the appropriate manufacturer's literature for allowable waiting periods for discharge of capacitors. Verify with a CAT III or IV voltmeter rated per NFPA 70E that all capacitors have discharged.

⚠ WARNING

Proper Field Wiring and Grounding Required!

Failure to follow code could result in death or serious injury.

All field wiring MUST be performed by qualified personnel. Improperly installed and grounded field wiring poses FIRE and ELECTROCUTION hazards. To avoid these hazards, you MUST follow requirements for field wiring installation and grounding as described in NEC and your local/state/national electrical codes.

1. Verify that the power supply complies with the unit nameplate specifications.
2. Inspect all control panel components and tighten any loose connections.
3. Connect properly sized and protected power supply wiring to a field-supplied/installed disconnect switch and to the main power terminal block (HTB1) in the unit control panel.
4. Install proper grounding wires to an earth ground. Refer to Table 8, p. 55 for ground wire torque.

Table 8. Ground wire torque

Ground Wire Size (AWG)	Torque (in-lbs)
10 – 14	35
8	40
4 – 6	45
2/0 – 0	50

5. Units with factory installed circuit breakers may come equipped with an adjustable dial located on front of the circuit breaker. Refer to "Pre-Start," p. 66 for instructions corresponding to adjustment of breaker dial (s).

Electric Heat Requirements

1. Verify that the power supply complies with the electric heater specifications on the unit and heater nameplate.
2. Inspect the heater junction box and control panel and tighten any loose connections.
3. Check electric heat circuits for continuity.

Low Voltage Wiring

Mount the indoor thermostat, zone sensor, or programmable zone sensor in accordance with the corresponding thermostat installation instructions. Install color-coded, weather-proof, multi-wire cable according to the field wiring instructions.

Note: *Refer to thermostat or zone sensor wire installation guide for proper wire gauge.*

Through-the-Base Gas Installation

Important: *All phases of this installation must comply with national, state, and local codes. In absence of local codes, the installation must conform with American National Standard-Z223.1a-National Fuel Gas Code Latest Revision.*

Note: *For complete Gas Heat User information, Operation, Start-up, Shutdown and Maintenance refer to* *"Gas Heat Operation and Maintenance," p. 88.*

1. Remove the access panel for the heat section on the front of the unit for field connections.
2. The gas piping assembly ships inside this section and includes the shut-off valve, a pressure tap for testing, and the necessary unions for field connection. For through the base access, remove the factory-provided

cap from the base pan opening. See Figure 79, p. 56 and Figure 80, p. 56.

3. Route field piping through this hole to the dimension shown in Table 9, p. 56.
4. Place the assembly through the cabinet opening shown in Figure 80, p. 56 and Figure 81, p. 56, and make the union connection to the field piping and to the gas train.

Table 9. Through-the-base gas piping dimension

Cabinet	Dimension A (inch)
A.0, B.0 and C.0	4 5/8
D.0 and D.1	1 3/16

Figure 79. Through-the-base gas pipe height

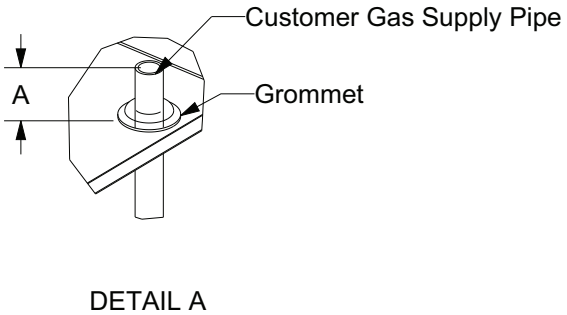

Figure 80. Through-the-base gas pipe assemblies for A.0, B.0 and C.0 cabinet units

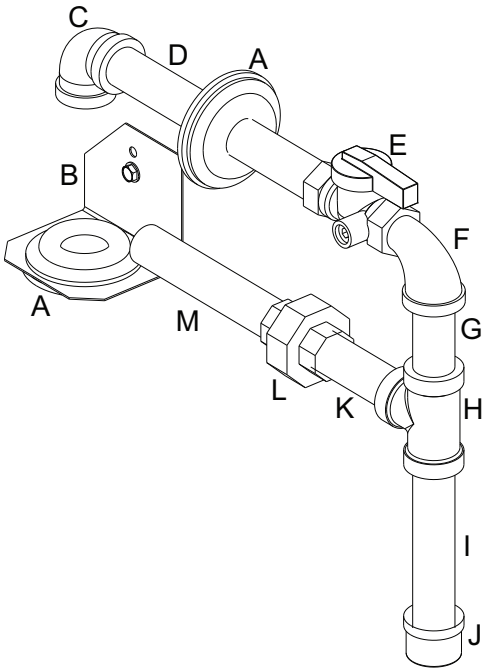

Table 10. Through-the-base gas pipe assembly components for A.0, B.0 and C.0 cabinets

Component	Description	Connection Size	
		1/2 inch	3/4 inch
A	Grommets	½	¾
B	TBUG bracket	-	-
C	90° Elbow	½	¾
D	Pipe fitting	½ x 7¼	¾ x 6½
E	Gas ball valve	½	¾
F	Street elbow	½	¾
G	Pipe fitting	½ x 2 ½	¾ x 2¼
H	Tee pipe	½	¾
I	Pipe fitting	½ x 4	¾ x 4
J	Pipe cap	½	¾
K	Pipe fitting	½ x 2 ¾	¾ x 2
L	Pipe union	½	¾
M	Pipe fitting	½ x 4 ½	¾ x 5¼

Note: *All modulating gas models use 3/4-inch gas piping.*

Figure 81. Through-the-base gas pipe assembly for D.0 and D.1 cabinets

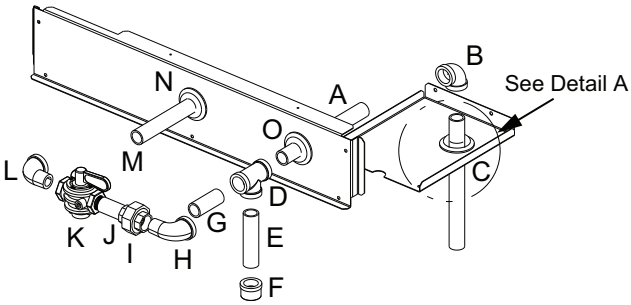

Table 11. Through-the-base gas pipe assembly for D.0 and D.1 cabinets

Component	Description
A	Grommet
B	Grommet
C	Pipe Fitting (3/4-in. x 8 1/2-in.)
D	90° Elbow
E	Support Plate
F	Tee
G	Pipe Fitting (3/4-in. x 4-in.)
H	Cap
I	Pipe Fitting (3/4-in. x 2 1/2-in.)
J	90° Street Elbow

Table 11. Through-the-base gas pipe assembly for D.0 and D.1 cabinets (continued)

Component	Description
K	Pipe Union
L	Pipe Fitting (3/4-in. x 2 1/2-in.)
M	Gas Shut-off Valve
N	90° Street Elbow
O	Pipe Fitting (3/4-in. x 6 1/2-in.)

For detailed through-the-base gas installation instructions, refer to the *Through-the-Base Gas Piping Gas/Electric Packaged Units 3 to 25 Tons Installation Instructions* (ACC-SVN17*-EN) provided with through-the-base gas installation kit.

Requirements of Gas Heat

The unit gas train and optional through-the-base gas shut-off valve are rated at 0.50 PSIG maximum. A pressure reducing regulator is recommended to prevent this maximum from being exceeded. These components must be isolated during field gas piping test that exceed 0.50 PSIG.

Important: *It is recommended that the field piping be capped prior to the unit gas train or optional through-the-base gas shut-off valve if present.*

- ☐ Gas supply line properly sized and connected to the unit gas train.
- ☐ All gas piping joints properly sealed.
- ☐ Gas piping leak checked with a soap solution. If piping connections to the unit are complete, do not pressurize piping in excess of 0.50 PSIG or 14-inch w.c. to prevent component failure.
- ☐ Drip leg installed in the gas piping near the unit.
- ☐ Flue exhaust clear of any obstruction.
- ☐ Supply and manifold pressures should be checked during unit commissioning (see Table 12, p. 57 and Table 13, p. 57).

Table 12. Gas heat data - supply and manifold pressure requirements – two-stage gas

Description	Y(S,H)K(036-150)*	Y(S,H)K(180-300)*		
Heating Input Rate — Btu/h	80,000 – 250,000	250,000	320,000	400,000
Minimum Supply Gas Pressure NG/LP (in. w.c.)	4.5/11.5	4.5/11.5		6/11.5
Maximum Supply Gas Pressure (in. w.c.)	14			
Manifold Gas Pressure – 1st Stage -NG (in. w.c.)	1.8	1.7	1.8	1.7
Manifold Gas Pressure – 2nd Stage -NG (in. w.c.)	3.5	3.3	3.5	3.3

Table 13. Gas heat data - supply and manifold pressure requirements - modulating gas (model number digit 10 = B)

Description	Model Number Y(S,H)K (072-300)*
Heating Input Rate - Btu/h	80,000 – 400,000
Minimum Supply Gas Pressure NG/LP (in. w.c.)	5/11.5
Maximum Supply Gas Pressure (in. w.c.)	14
Manifold Gas Pressure - Full Gas Input Rate - NG/LP (in. w.c.)	3.5/10

Modulating Gas Heat

For models Y(S,H)K (072,090,102,120,150)***B(H,L):

1. Confirm the vertical slide bracket on the DAS vertical tube is positioned to block all the hole(s) for downflow configuration.

   Note: *Number of holes will vary. Verify bracket is covering all holes in the vertical tube, regardless of quantity.*

2. Removal of horizontal duct supply cover is required to view DAS tubing located behind the heat exchanger tubes.

Figure 82. Downflow position shown

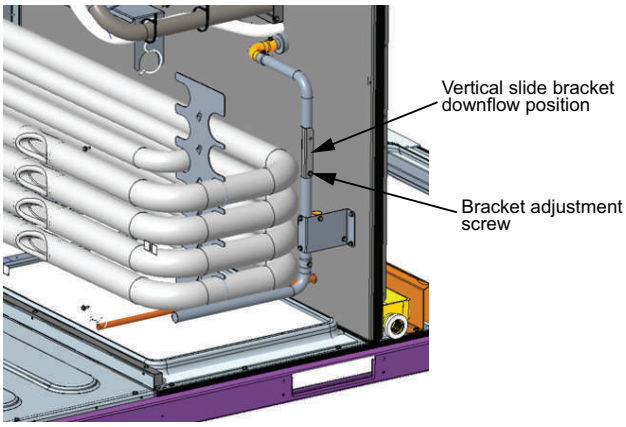

Figure 83. Vertical tube hole(s) location

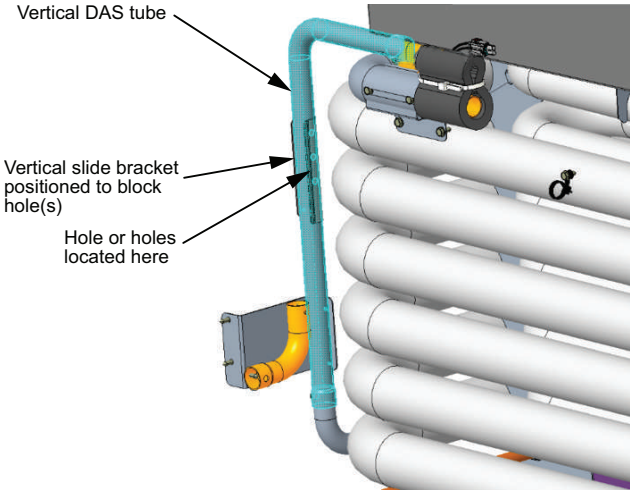

Table 14. Sizing natural gas pipe mains and branches

Iron Pipe Size (IPS) Inches					
Length of Pipe (Ft.)	**1/2-in. Pipe**	**3/4-in. Pipe**	**1-in. Pipe**	**1¼-in. Pipe**	**1½-in. Pipe**
15	76	176	345	750	1220
30	52	120	241	535	850
45	43	99	199	435	700
60	38	86	173	380	610
75	-	77	155	345	545

Note: Capacity of pipe of different diameters and lengths in Cu. Meter per Hr. with pressure drop of 74.6 Pa and specific gravity of 0.60.

Table 15. Iron pipe size (SI) millimeters

Iron Pipe Size (SI) Millimeters					
Length of Pipe (Meters)	**15 mm Pipe**	**20 mm Pipe**	**25 mm Pipe**	**32 mm Pipe**	**40 mm Pipe**
4.6	2.15	4.98	9.76	21.23	34.54
9.1	1.47	3.39	6.82	15.14	24.06
13.7	1.21	2.80	5.63	12.31	19.82
18.3	1.07	2.43	4.89	10.76	17.27
22.9	—	2.18	4.38	9.76	15.40

Note: Capacity of pipe of different diameters and lengths in Cu. Meter per Hr. with pressure drop of 74.6 Pa and specific gravity of 0.60.

Figure 84. Schematic diagram for field gas piping to units

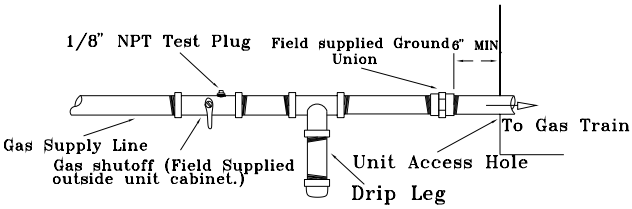

Condensate Drain Configuration

⚠ WARNING

Hazardous Voltage!

Failure to disconnect power before servicing could result in death or serious injury.
Disconnect all electric power, including remote disconnects before servicing. Follow proper lockout/tagout procedures to ensure the power can not be inadvertently energized. Verify that no power is present with a voltmeter.

An evaporator condensate drain connection is provided on each unit. Refer to "Ductwork," p. 41 for the appropriate drain location.

The A.0, B.0 and C.0 cabinet condensate drain pan is convertible. Refer to "Ductwork," p. 41 drawings. It can be converted to drain condensate from the front side of the unit or through the base.

To convert the drain condensate out of the front of the unit:

1. Remove evaporator access panel, left control box door, and heat section panel.
2. Remove the support panel that the condensate drain pan exits through.
3. Slide the condensate drain pan out of the unit and rotate it 180 degrees.
4. Slide the condensate drain pan back into the unit. Align the drain with the grommeted opening in the rear support panel and push until the coupling is seated in the grommet.
5. Replace the front support panel. Align the condensate drain pan support in the grommeted hole as the panel is put in place.
6. Replace evaporator access panel, left control box door, and heat section panel.

To convert the drain condensate through the base of the unit:

1. Remove evaporator access panel, left control box door, and heat section panel.
2. Remove the support panel that the condensate drain pan exits through.
3. Slide the condensate drain pan out of the unit.

4. Place on a level surface in the position it was removed from the unit.
5. Remove the plug knockout in the bottom of the drain pan to convert it to through the base drainage.
6. Plug the original condensate drain opening with a field supplied 3/4-inch NPT plug.
7. Slide the condensate drain pan back into the unit. Align the drain support with the grommeted opening in the rear support panel and push until the support is seated in the grommet.
8. Replace the front support panel. Align the plugged condensate drain pan coupling in the grommeted hole as the panel is put in place.
9. Replace evaporator access panel, left control box door, and heat section panel.

A condensate trap must be installed at the unit due to the drain connection being on the **negative pressure** side of the fan. Install the p-trap using the guidelines in Figure 85, p. 59.

A condensate drain line must be connected to the p-trap. Pitch the drain lines at least 1/2-inch for every 10 feet of horizontal run to confirm proper condensate flow. Do not allow the horizontal run to sag causing a possible double trap condition. This can result in condensate backup due to air lock.

Figure 85. Condensate trap installation

	Drain Pan Type Connection	
CABINET	STD	STAINLESS
A.0/B.0/C.0	3/4" NPT	3/4" NPT
D.0/D.1	1" PVC Socket	1" NPT

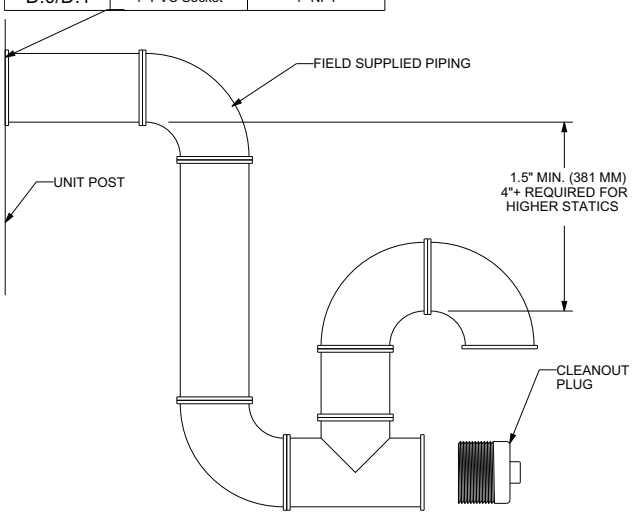

Drain Pan Removal (Units with Condensate Overflow Switch Option)

Before drain pan removal, the switch wire must be disconnected from wire tie on panel and/or any tape before drain pan can be removed.

Avoid catching the wire on the bottom of indoor coil or any protrusion.

Note: *When reversing the drain pan on some units, the condensate overflow switch will need to be moved to the second hole in its bracket to avoid contact with headers or indoor coil.*

Furnace Condensate Drain

Modulating gas units are equipped with a furnace condensate drain system to evacuate any condensation (water) that may form inside the heat exchanger during cooling system operation. The unit does not condense during heating operation. Neutralization is not necessary as the condensate drainage is water only and is not acidic.

Filter Installation

The quantity of filters is determined by unit size. Refer to Table 1, p. 10 for filter sizes. Access to the filters is obtained by removing the filter access panel.

Note: *Do not operate the unit without filters.*

Outdoor Motor Controllers

When either an outdoor motor or an outdoor motor controller fail, the motor and controller must be replaced together as received in the service kit since they are a paired tuned drive/motor assembly. Failure to do so could result in loss of unit function.

In B.0 and C.0 cabinets, the outdoor motor controller is located below the control box in the condenser section. See figure below.

Figure 86. Location of outdoor motor controllers – B.0 and C.0 cabinets

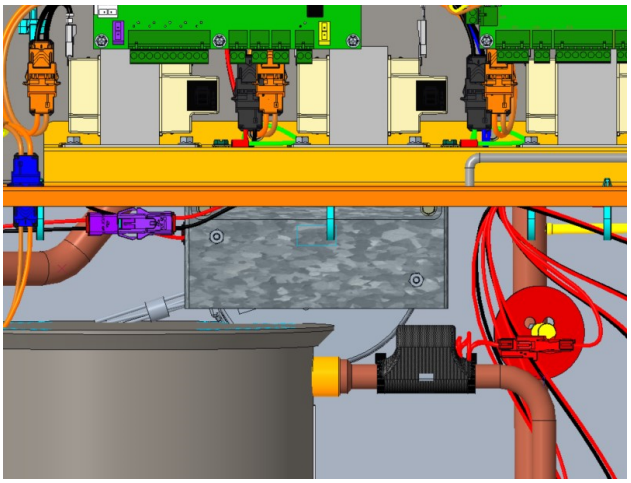

Field Installed Power Wiring

⚠ WARNING

Proper Field Wiring and Grounding Required!

Failure to follow code could result in death or serious injury.

All field wiring MUST be performed by qualified personnel. Improperly installed and grounded field wiring poses FIRE and ELECTROCUTION hazards. To avoid these hazards, you MUST follow requirements for field wiring installation and grounding as described in NEC and your local/state/national electrical codes.

Note: *Refer to Table 16, p. 60 for ground wire torque.*

An overall dimensional layout for the field installed wiring entrance into the unit is illustrated in the Dimensions and Weights chapter. See the following guidelines to confirm the unit supply power wiring is properly sized and installed.

Verify the power supply available is compatible with unit nameplate ratings. The available supply power must be within 10 percent of the rated voltage stamped on the nameplate. Use only copper conductors to connect the power supply to the unit.

NOTICE

Use Copper Conductors Only!

Failure to use copper conductors could result in equipment damage as the equipment was not designed or qualified to accept other types of conductors.

Important: *If the unit is not equipped with an optional factory installed non-fused disconnect switch or circuit breaker, a field supplied disconnect switch must be installed at or near the unit in accordance with the National Electrical Code (NEC latest edition).*

Main Unit Power

⚠ WARNING

Proper Field Wiring and Grounding Required!

Failure to follow code could result in death or serious injury.

All field wiring MUST be performed by qualified personnel. Improperly installed and grounded field wiring poses FIRE and ELECTROCUTION hazards. To avoid these hazards, you MUST follow requirements for field wiring installation and grounding as described in NEC and your local/state/national electrical codes.

⚠ WARNING

Hazardous Voltage!

Failure to disconnect power before servicing could result in death or serious injury.

Disconnect all electric power, including remote disconnects before servicing. Follow proper lockout/tagout procedures to ensure the power can not be inadvertently energized. Verify that no power is present with a voltmeter.

⚠ WARNING

Electrical Shock Hazard!

Failure to follow instructions below could result in death or serious injury.

Properly connect the system's oversized protective earthing (grounding) terminal(s).

Standard Wiring

1. Location of the applicable electrical service entrance is illustrated in the Dimensions and Weights chapter. Complete the unit power wiring connections at HTB1 main power terminal block in unit control panel. Refer to the customer connection diagram shipped with the unit for specific termination points.
2. Provide proper grounding for the unit in accordance with local and national codes. Refer to Table 16, p. 60 for ground wire torque.

Table 16. Ground wire torque

Ground Wire Size (AWG)	Torque (in-lbs)
10 – 14	35
8	40
4 – 6	45
2/0 – 0	50

3. Units with factory installed circuit breakers may come equipped with an adjustable dial located on front of the circuit breaker. Refer to "Pre-Start," p. 66 for instructions corresponding to adjustment of breaker dial (s).

Optional TBUE Wiring (Through-the-Base Electrical Option)

- Location of the applicable electrical service is illustrated in Figure 87, p. 62 through Figure 90, p. 62. Refer to the customer connection diagram shipped with the unit for specific termination points. The termination points, depending on the customer option selected, would be a factory mounted non-fused disconnect switch (UDC) or circuit breaker (UCB). If neither a factory mounted non-fused disconnect switch (UDC) or circuit breaker (UCB) was factory mounted, field wiring connections should

be terminated in the control box at main panel power terminal block (HTB1).

NOTICE

Equipment Damage!

Failure to follow instructions below could result in equipment damage.

Properly and completely seal all conduit, conduit openings, and factory through-the-base electrical (TBUE) penetrations to prevent building air from entering unit and causing water damage from condensation.

- Provide proper grounding for the unit in accordance with local and national codes. Refer to Table 16, p. 60 for ground wire torque.

Notes:

- *Black gasket is shipped from the factory and is located in the literature ship-with bag in the control box. Apply black gasket around conduit plate on all four sides after installation to prevent air leakage from the building entering the electrical enclosures.*
- *Seal any unused unit penetrations and around conduit and wiring at all unit and curb penetrations.*
- *Seal any unused conduit openings, around all conduit and wiring within conduit, and any openings that would allow air leakage from the building entering the equipment electrical enclosures.*
- *Installer provided sealants may be needed to completely seal openings.*

Field-Installed Control Wiring

⚠ WARNING

Hazardous Voltage!

Failure to disconnect power before servicing could result in death or serious injury.

Disconnect all electric power, including remote disconnects before servicing. Follow proper lockout/tagout procedures to ensure the power can not be inadvertently energized. Verify that no power is present with a voltmeter.

⚠ WARNING

Proper Field Wiring and Grounding Required!

Failure to follow code could result in death or serious injury.

All field wiring MUST be performed by qualified personnel. Improperly installed and grounded field wiring poses FIRE and ELECTROCUTION hazards. To avoid these hazards, you MUST follow requirements for field wiring installation and grounding as described in NEC and your local/state/national electrical codes.

An overall layout of the various control options available with the required number of conductors for each control device is illustrated in the wiring diagram located on main control box door.

All field wiring must conform to NEC guidelines as well as state and local codes.

Control Power Transformer

The 24 volt control power transformers are to be used only with the accessories called out in this manual. Transformers rated greater than 50 VA are equipped with internal circuit breakers. If a circuit breaker trips, turn **OFF** all power to the unit before attempting to reset it.

⚠ WARNING

Hazardous Voltage!

Failure to disconnect power before servicing could result in death or serious injury.

Disconnect all electric power, including remote disconnects before servicing. Follow proper lockout/tagout procedures to ensure the power can not be inadvertently energized. Verify that no power is present with a voltmeter.

The transformers are located in the control panel. The circuit breaker is located on the right side of the transformer and can be reset by pressing in on the black reset button.

Controls using 24 Vac

Before installing any connecting wiring, refer to the Dimensions and Weights chapter for the electrical access locations provided on the unit and Table 17, p. 62 for AC conductor sizing guidelines, and;

1. Use copper conductors unless otherwise specified.
2. AC control wiring between the controls and the unit termination point should not exceed 2.5 ohms/conductor for the length of the run.

NOTICE

Component Failure!

Resistance in excess of two and a half (2.5) ohms per conductor could result in component failure due to insufficient AC voltage supply.

Do not exceed two and a half (2.5) ohms per conductor for the length of the run.

Note: *Check all loads and conductors for grounds, shorts, and mis-wiring.*

3. Do not run the AC low voltage wiring in the same conduit with the high voltage power wiring.
4. Route low voltage wiring per illustrations below.

   These illustrations are representative as some models may appear slightly different. The low voltage wiring routing is the same.

Figure 87. Low voltage wiring — A.0/B.0 cabinet

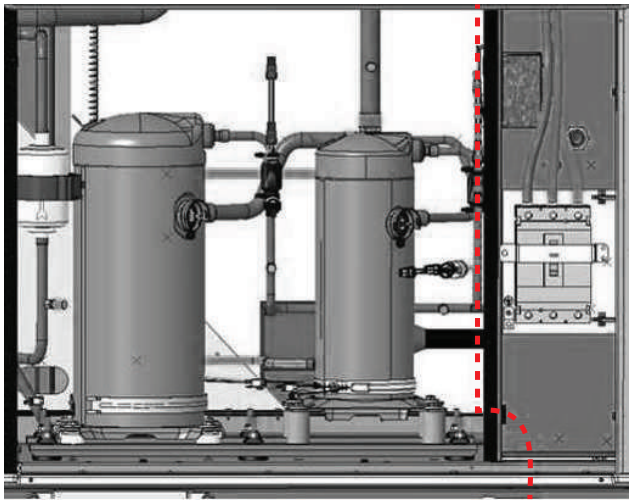

Figure 88. Low voltage wiring — C.0 cabinet

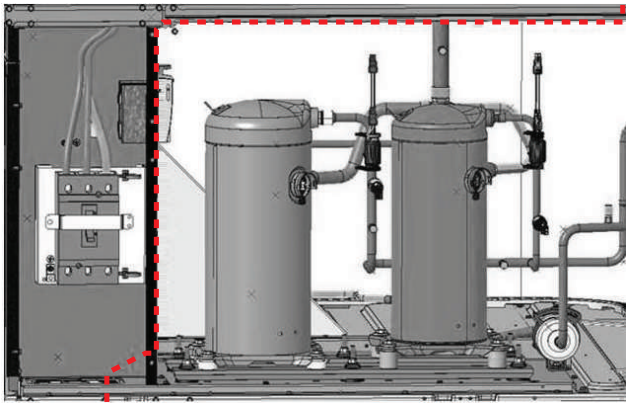

Figure 89. Low voltage wiring — D.0 cabinet

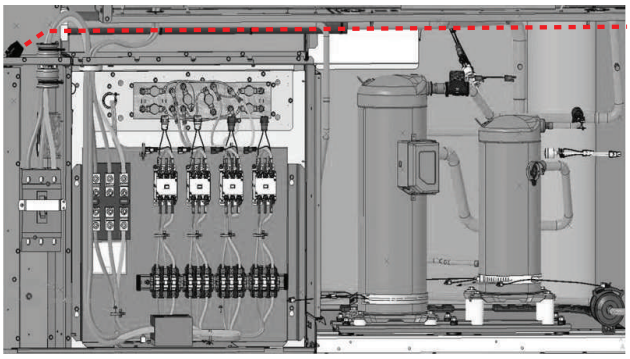

Figure 90. Main control panel low voltage wiring

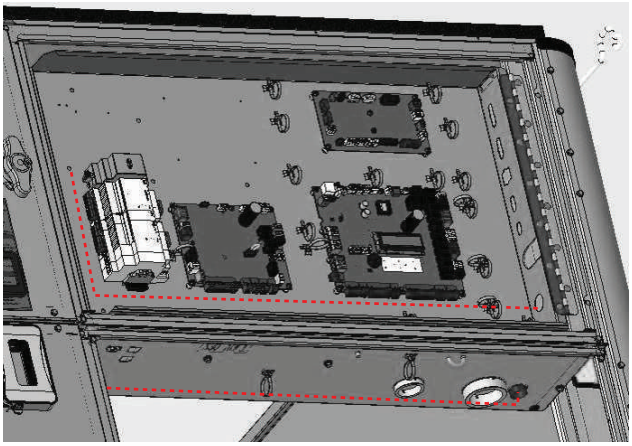

Table 17. Recommended wire lengths

Wire Size		Maximum recommended wire length from unit controller to sensor	
AWG	**mm^2**	**Meters**	**Feet**
22	0.33	0–46	0–150
20	0.50	47–73	151–240
18	0.75	74–117	241–385
16	1.30	118–185	386–610
14	2.00	186–296	611–970

Note: The total resistance of these low voltage wires must not exceed 2.5 Ω/conductor. Any resistance greater than 2.5 Ω may cause the control to malfunction due to an excessive voltage drop.

Controls using DC Analog Input/Outputs (Standard Low Voltage Multi conductor Wire)

Before installing any connecting wiring between the unit and components utilizing a DC analog input\output signal, refer to the Dimensions and Weights chapter for the electrical access locations provided on the unit.

- Table 18, p. 63 lists the conductor sizing guidelines that must be followed when interconnecting the DC binary output devices and the system components utilizing a DC analog input/output signal to the unit.

  Notes:

  – *Resistance in excess of 2.5 ohms per conductor can cause deviations in the accuracy of the controls.*

  – *Confirm the wiring between controls and the unit termination point does not exceed two and a half (2.5) ohms/conductor for the length of the run.*

- Do not run the electrical wires transporting DC signals in or around conduit housing high voltage wires.

DC Conductors

Table 18. Zone sensor module wiring

Distance from Unit to Control	Recommended Wire Size
0 - 150 feet	22 gauge
0 - 45.7 m	0.33 mm^2
151 - 240 feet	20 gauge
46 - 73.1 m	0.50 mm^2
241 -385 feet	18 gauge
73.5 - 117.3 m	0.75 mm^2
386 - 610 feet	16 gauge

Table 18. Zone sensor module wiring (continued)

Distance from Unit to Control	Recommended Wire Size
117.7 - 185.9 m	1.3 mm^2
611 - 970 feet	14 gauge
186.2 - 295.7 m	0.2 mm^2

Note: *See Symbio™ 700 unit controls schematic, 1213-4349, for controls wiring.*

Space Temperature Averaging

Space temperature averaging is accomplished by wiring a number of remote sensors in a series/parallel circuit.

When using the BAYSENS016* or BAYSENS077*, at least four sensors are required to accomplish space temperature averaging.

- Example #1 illustrates two series circuits with two sensors in each circuit wired in parallel. The square of any number of remote sensors is required.
- Example #2 illustrates three sensors squared in a series/parallel circuit. Using BAYSENS077*, two sensors are required to accomplish space temperature averaging.
- Example #3 illustrates the circuit required for this sensor. Table 19, p. 64 lists the temperature versus resistance coefficient for all sensors.

Figure 91. Examples

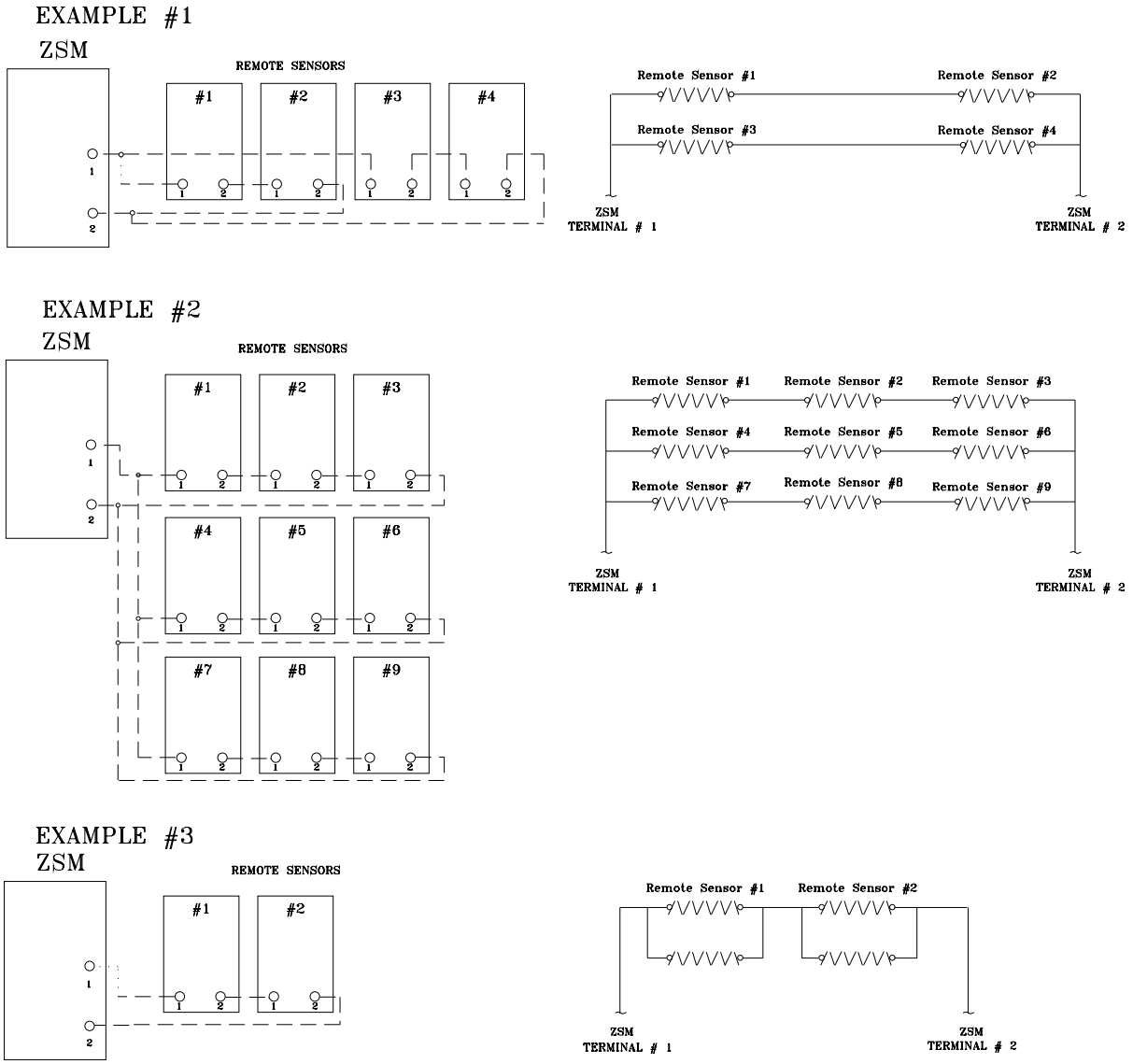

Table 19. Temperature vs. resistance

Temperature		Nominal Resistance (kOhms)
Degrees °F	Degrees °C	
-20	-28.9	170.1
-15	-26.1	143.5
-10	-23.3	121.4
-5	-20.6	103.0
0	-17.8	87.56
5	-15.0	74.65
10	-12.2	63.80
15	-9.4	54.66
20	-6.7	46.94

Table 19. Temperature vs. resistance (continued)

Temperature		Nominal Resistance (kOhms)
Degrees °F	Degrees °C	
25	-3.8	40.40
30	-1.1	34.85
35	1.7	30.18
40	4.4	26.22
45	7.2	22.85
50	10.0	19.96
55	12.8	17.47
60	15.6	15.33
65	18.3	13.4

Table 19. Temperature vs. resistance (continued)

Temperature		Nominal Resistance (kOhms)
Degrees °F	Degrees °C	
70	21.1	11.89
75	23.9	10.50
80	26.7	9.297

Table 19. Temperature vs. resistance (continued)

Temperature		Nominal Resistance (kOhms)
Degrees °F	Degrees °C	
85	29.4	8.247
90	32.2	7.330
95	35.0	6.528

Pre-Start

Use the checklist provided below in conjunction with the General Unit Requirements checklist to confirm the unit is properly installed and ready for operation.

⚠ WARNING

Hazardous Voltage w/Capacitors!

Failure to disconnect power and discharge capacitors before servicing could result in death or serious injury.

Disconnect all electric power, including remote disconnects and discharge all motor start/run capacitors before servicing. Follow proper lockout/tagout procedures to ensure the power cannot be inadvertently energized. Verify with a CAT III or IV voltmeter rated per NFPA 70E that all capacitors have discharged.

- Check all electrical connections for tightness and point of termination accuracy.
- Verify that the condenser airflow will be unobstructed.

⚠ WARNING

Rotating Components!

Failure to disconnect power before servicing could result in rotating components cutting and slashing technician which could result in death or serious injury.

During installation, testing, servicing and troubleshooting of this product it may be necessary to work with live and exposed rotating components. Have a qualified or licensed service individual who has been properly trained in handling exposed rotating components, perform these tasks.

- Verify that the condenser fan and indoor blower turn freely without rubbing and are properly tightened on the shafts.
- Verify that a condensate trap is installed and the piping is properly sized and pitched.
- Verify that the correct size and number of filters are in place.
- Inspect the interior of the unit for tools and debris and install all panels in preparation for starting the unit. For units with factory installed adjustable circuit breakers locate Ir/A dial on front cover of circuit breaker. Verify dial setting matches MOP value shown on unit nameplate. If value does NOT match use a small flat headed tool to adjust dial to proper setting.

NOTICE

Equipment Damage!

Failure to properly set circuit breaker dial could result in equipment damage.

For units with circuit breaker overload protection, set adjustable dial (Ir/A) to the MOP value on the equipment nameplate. Determination of the unit mounted circuit breaker serving as the overcurrent protection device for the equipment is strictly dependent on acceptance by the Inspecting Authority Having Jurisdiction.

Voltage Imbalance

Three phase electrical power to the unit must meet stringent requirements for the unit to operate properly.

1. Measure each leg (phase-to-phase) of the power supply. Each reading must fall within the utilization range stamped on the unit nameplate. If any of the readings do not fall within the proper tolerances, notify the power company to correct this situation before operating the unit.

   Excessive three phase voltage imbalance between phases will cause motors to overheat and eventually fail. The maximum allowable voltage imbalance is 2 percent.

2. Measure and record the voltage between phases 1, 2, and 3 and calculate the amount of imbalance as follows:

   $$\% \text{ Voltage Imbalance} = \frac{100 \times (AV - VD)}{AV} \text{ where;}$$

   $$AV \text{ (Average Voltage)} = \frac{Volt1 + Volt2 + Volt3}{3}$$

   - V1, V2, V3 = Line Voltage Readings
   - VD = Line Voltage reading that deviates the farthest from the average voltage.

   Example: If the voltage readings of the supply power measured 221, 230, and 227, the average volts would be:

   $$\frac{221 + 230 + 227}{3} = 226 \text{ Avg.}$$

   VD (reading farthest from average) = 221

   The percentage of Imbalance equals:

   $$\frac{100 \times (226 - 221)}{226} = 2.2\%$$

   The 2.2 percent imbalance in this example exceeds the maximum allowable imbalance of 2.0 percent. This much imbalance between phases can equal as much

as a 20 percent current imbalance with a resulting increase in motor winding temperatures that will decrease motor life.

3. If the voltage imbalance is over 2 percent, notify the proper agencies to correct the voltage problem before operating this equipment.

Electrical Phasing (Three Phase Motors)

The compressor motor(s) and the supply fan motor are internally connected for the proper rotation when the incoming power supply is phased as A, B, C.

Proper electrical supply phasing can be quickly determined and corrected before starting the unit by using an instrument such as an Associated Research Model 45 Phase Sequence Indicator and following the steps below.

⚠ WARNING

Hazardous Voltage w/Capacitors!

Failure to disconnect power and discharge capacitors before servicing could result in death or serious injury.

Disconnect all electric power, including remote disconnects and discharge all motor start/run capacitors before servicing. Follow proper lockout/tagout procedures to ensure the power cannot be inadvertently energized. Verify with a CAT III or IV voltmeter rated per NFPA 70E that all capacitors have discharged.

1. Turn the field supplied disconnect switch that provides power to the main power terminal block or to the line side of the optional factory mounted disconnect switch **OFF**.
2. Connect the phase sequence indicator leads to the terminal block or to the line side of the optional factory mounted disconnect switch as follows:
   a. Brown (phase A) to L1
   b. Orange (phase B) to L2
   c. Yellow (phase C) to L3
3. Close the field supplied main power disconnect switch or circuit protector switch that provides the supply power to the unit.

   Note: *Upon closing main power disconnect and the unit mounted disconnect switch or circuit breaker, the phase monitor will verify proper phasing. If LED on face of the monitor is red, correct supply power fault.*

⚠ WARNING

Live Electrical Components!

Failure to follow all electrical safety precautions when exposed to live electrical components could result in death or serious injury.

When it is necessary to work with live electrical components, have a qualified licensed electrician or other individual who has been properly trained in handling live electrical components perform these tasks.

Important: *To prevent injury or death from electrocution, it is the responsibility of the technician to recognize this hazard and use extreme care when performing service procedures with the electrical power energized.*

4. Observe the ABC and CBA phase indicator lights on the face of the sequencer. The ABC indicator light will glow if the phase is ABC. If the CBA indicator light glows, **open** the disconnect switch or circuit protection switch and **reverse** any two power wires.
5. Restore the main electrical power and recheck the phasing. If the phasing is correct, **open** the disconnect switch or circuit protection switch and **remove** the phase sequence indicator.

Compressor Crankcase Heaters

- Each compressor can be equipped with a crankcase heater (Some units include crankcase heater as standard). The proper operation of the crankcase heater is important to maintain an elevated compressor oil temperature during the **off** cycle to reduce oil foaming during compressor starts.
- Oil foaming occurs when refrigerant condenses in the compressor and mixes with the oil. In lower ambient conditions, refrigerant migration to the compressor could increase.
- When the compressor starts, the sudden reduction in crankcase pressure causes the liquid refrigerant to boil rapidly causing the oil to foam. This condition could damage compressor bearings due to reduced lubrication and could cause compressor mechanical failures.

1. Before starting the unit in the **cooling** mode, flip the system switch **OFF**.
2. Turn the main power disconnect **ON** and allow the crankcase heater to operate a minimum of 8 hours.
3. Before closing the main power disconnect switch, confirm the system selection switch is **OFF** and the fan selection switch is in the **AUTO** position.
4. Close the main power disconnect switch and the unit mounted disconnect switch, if applicable.

Note: *When closing main power disconnect and the unit mounted disconnect switch or circuit breaker, the phase monitor will verify proper phasing. If LED on face of the monitor is red, correct supply power fault.*

⚠ WARNING

Live Electrical Components!

Failure to follow all electrical safety precautions when exposed to live electrical components could result in death or serious injury.

When it is necessary to work with live electrical components, have a qualified licensed electrician or other individual who has been properly trained in handling live electrical components perform these tasks.

Important: *To prevent injury or death from electrocution, it is the responsibility of the technician to recognize this hazard and use extreme care when performing service procedures with the electrical power energized.*

Symbio Controls

The Symbio™ 700 supports a Service Test Mode that can be used to energize the various components of the system, either to support general system startup tasks or to support troubleshooting. The user can initiate Service Test Mode through the controller user interfaces, including the Symbio Service and Installation mobile application.

The modes shown below can be initiated. Depending on the equipment configuration, the controller will energize the appropriate outputs. A user-selected timeout value will determine how long the controller will remain in any given state once initiated. For detailed information on how each Service Test State is interpreted based on the equipment configuration, see *Symbio™ 700 Controller with Precedent™ Packaged Rooftop Air-Conditioners Application Guide* (ACC-APG002*-EN).

Figure 92. Symbio 700 service test mode

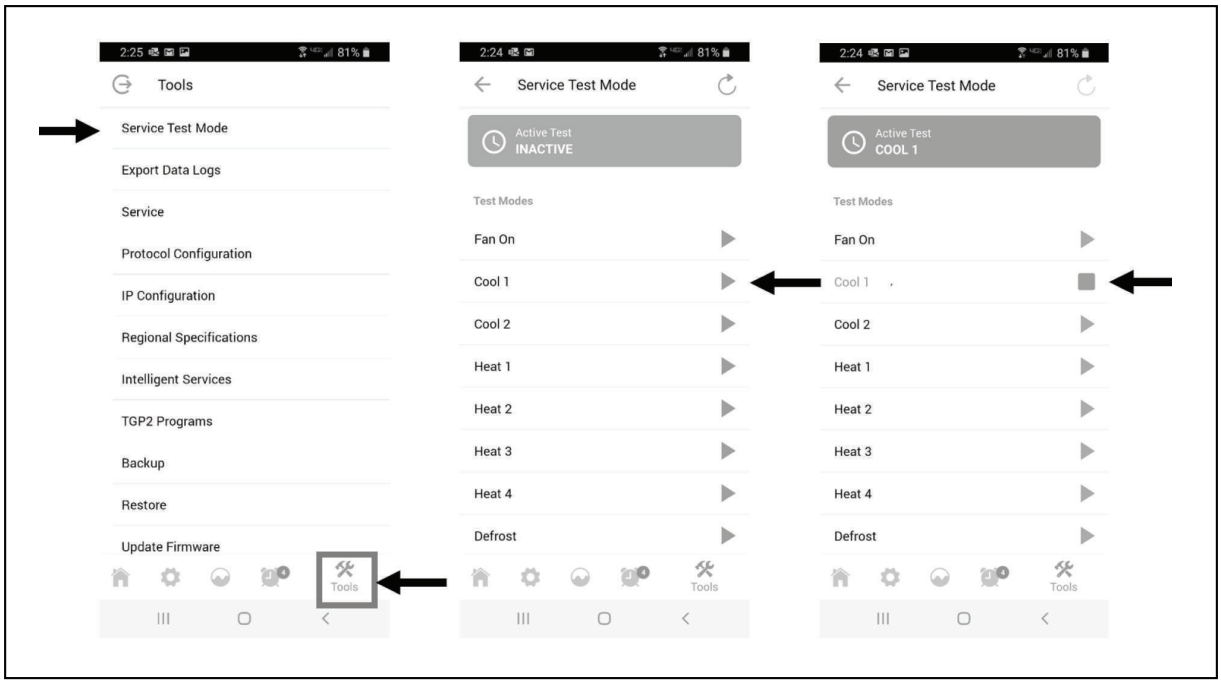

Unit Start-Up

Sequence of Operation

See *Symbio™ 700 Controller with Precedent™ Packaged Rooftop Air-Conditioners Application Guide* (ACC-APG002*-EN).

Ignition Module – Two-stage

Two-stage (IGN) runs self-check (including verification that the gas valve is de-energized). (IGN) checks the high limit switches (TC01 and TC02) for normally closed contacts, the pressure switch (PS) for normally open contacts, and the flame rollout (FR) switch for continuity.

(IGN) energizes inducer blower on high speed to check pressure switch closure. If the pressure switch is closed, the inducer blower starts a 20 second pre-purge (15 seconds on high speed followed by 5 seconds on low speed). If the pressure switch (PS) is still open, the inducer blower will continue to be energized on high speed until pressure switch closure.

After pre-purge completes, the IGN energizes the first stage gas output for first stage heat demand and energizes second stage gas output for second stage heat and detects flame and de-energizes spark.

At this point indoor fan will start at minimum speed for the corresponding heat (first stage or second stage) demand.

For YSK(036-060)***(0,A)(L,M,H) and YHK036***(0,A)(L, M,H) models, a fixed 45-second indoor blower delay on timer starts. After the indoor blower delay on is completed, the (IGN) energizes the indoor blower.

The (IGN) enters a normal operating loop where all inputs are continuously monitored.

If a call for second stage heat is initiated after a call for first stage heat is established, the (IGN) energizes the second stage of the gas valve and the second stage of inducer blower.

When the zone thermostat is satisfied, the (IGN) de-energizes the gas valve. The (IGN) senses loss of flame.

The (IGN) initiates a 5 second inducer blower post purge. The Symbio™ 700 initiates a 90 second indoor blower-off delay at the current speed. The (IGN) de-energizes the inducer blower at the end of the post purge. The Symbio 700 de-energizes the indoor blower at the end of the selected indoor blower-off delay

Note: *For complete Gas Heat User information, Operation, Start-up, Shutdown and Maintenance refer to* *"Gas Heat Operation and Maintenance," p. 88*.

Table 20. Ignition module diagnostics

Steady OFF	No Power/Failure/ Internal Failure
Steady ON	Normal – No Call for heat
Slow Flash Rate	Normal, call for heat (¾ second on, ¼ second off)

Table 20. Ignition module diagnostics (continued)

1 Flash	Loss of Communication
2 Flashes	System Lockout: Failed to detect or sustain flame. (failure to ignite, no spark, low/no gas pressure, etc.)
3 Flashes	Pressure switch problem detected. (no vent air flow, bad CBM, closed at initial call for heat). Auto reset.
4 Flashes	High Limit switch protection device open (excessive heat in combustion chamber, low airflow). Auto reset.
5 Flashes	Flame sensed and gas valve not energized, or flame sensed and no call for heat.
6 Flashes	Flame Rollout Switch open. (CBM failure, incorrect gas pressure, incorrect primary air). Requires manual reset of the switch.
7 Flashes	Weak Flame
8 Flashes	Internal Error
9 Flashes	Hardware Mismatch

Ignition Module – Modulating Gas

Call for Heat

1. Thermostat (or heat enable) contact closes providing call for heat.
2. The provided analog input is 2.0 Vdc (0.5% ModBus firing rate) or higher, the modulating actuator is placed in the park position and the draft inducer is energized, the air pressure transducer is calibrated, and the draft inducer is run to the **pre-purge** setting. A 15 to 30 second pre-purge is initiated. The display on the VB1285 will show [PUr]. See Table 21, p. 70 below.
3. The modulating actuator is moved to the ignition position during this time.
4. At the end of the pre-purge period, the ignition source is activated, and the main gas valve opens allowing gas to flow to the burners for the trial for ignition period [IGn].
5. Burners ignite and cross light. Flame is sensed and control continues the heating cycle.
6. Control enters a **Warm-up** period [HEA] that allows for burner stabilization prior to active modulation. Warm-up duration is program controlled.
7. At the end of the warm-up period, the 1st stage enters the run state characterized by normal burner modulation in response to the 2-6 Vdc analog input (1 - 56% ModBus firing rate) signal to the control [rUn].
8. The modulating gas valve is set as commanded by the

analog FIRING RATE input signal:

a. < 1.5 Vdc (0% ModBus Firing Rate)]: OFF

b. 1.5 – 2.0 Vdc (0.5% ModBus Firing Rate): Minimum fire (Manifold pressure .20 to.30 in. w.c.)

c. 2.1 – 6.0 Vdc (1 - 56% ModBus Firing Rate): Modulation linearized to firing rate (Modulating Section Manifold pressure .25 to 3.50 in. w.c.)

9. If heating demand continues to increase and the analog input signal exceeds 6.0 Vdc (56% ModBus firing rate), and provided the air pressure switch is closed, the VB1285 initiates a trial for ignition of the 2nd stage.
10. Burners ignite and cross light. Flame is sensed and control continues the heating cycle.
11. Once the 2nd stage operation is verified, the 1st stage modulation is reset to its minimum input rate.
12. The modulating gas valve is set as commanded by the analog FIRING RATE input signal and will modulate between 6.1 and 10.0 Vdc analog input (57 - 100% ModBus firing rate), while maintaining operation of the 2nd stage at 3.50–inches w.c. manifold pressure.
13. The control remains in the high fire mode as long as the firing rate signal is above 5.0 Vdc (46% ModBus firing rate).
14. If the firing rate signal drops below 5.0 Vdc (46% ModBus firing rate), the 2nd stage section will shut-off and the 1st stage will continue to operate and modulate in response to changes in analog signal voltage.
15. System will continue in the run state until the heat enable contacts open or the analog input signal drops below 1.5 Vdc (0.5% ModBus firing rate) signal.
16. When call for heat is removed, 1st stage gas valve closes and modulating actuator is moved to **Park** position, and the inducer is operated for a post purge period of 60 seconds [PUr].
17. Control returns to the standby mode [OFF].

Ignition and Operational Failures During a Call for Heat

1. If flame is not detected on the original ignition trial [A0 1], the controller enters an inter-purge period of 30 seconds [rEt] and then will initiate another ignition trial. The control will repeat this sequence for up to 4 ignition trials.
2. If four consecutive failed ignition trials occur, control will go into lockout [E0 1].
3. If flame is lost during an operating cycle [A02], the controller will operate same as in Step 1.
4. Limited low fire [A04] will happen if flame loss at low fire results in an auto-adjustment that limits the burner turn down during the rest of the current call for heat.
5. Lockout will also occur for the following:

   a. Open Limit or Rollout Switch [E02].

   b. Low air pressure sensor reading is air pressure does not correspond to gas pressure [E04].

   c. No R-W Enable [E09].
6. If the combustion air pressure switch opens (blocked vent or other airflow restriction) during heater operation with a continued call for heat, the control will lockout for one hour and then initiate a trial for ignition sequence.
7. Lockout will occur for any lockout error on either control and terminate heater operation for the duration of the lockout timing.
8. If no call for heat is present, controller is in the **Off** mode [OFF].

Recovery from Lockout (E Code)

1. If the call for heat (thermostat or heat enable closed) is still present one hour after a lockout occurs, the control will automatically reset and initiate a call for heat sequence.
2. Control may also be reset manually by removing power to the controller for 10 seconds and restoring power to controller.

Table 21. Lockout codes

Display Code	Code Type	Description	Additional Comments and Notes
BBB	10s L/O	Board Failure (Up to 10 seconds at power up)	Verify 24 Vac signal input at connector J6.
OFF	Status	UP Mode: Burner state = Off	
PUr	Status	UP Mode: Burner state = Purge	
I Gn	Status	UP Mode: Burner state = Ignition	
HEA	Status	UP Mode: Burner state = Warm up	
rUn	Status	UP Mode: Burner state = Run	
rEt	Status	UP Mode: Burner state = Retry (with A0 1 or A02)	Retry delay following either a failed ignition or a flame loss.
A0 1	Alert	Failed ignition attempt	
A02	Alert	Lost Flame	Ignition was successful but then flame disappeared.

Table 21. Lockout codes (continued)

Display Code	Code Type	Description	Additional Comments and Notes
A03	Alert	Insufficient Combustion Air	Blocked vent with actuator position derated by >20% from FRI setting
A04	Alert	Limited Low Fire (due to Lost Flame Auto-Adaptation)	Flame loss at low fire results in an auto-adjustment that limits the burner turn down during the rest of the current call for heat.
A05	Alert	Weak Flame Signal	Flame presence signal of less than 1.5µA indicates an aged flame rod.
A07	Alert	Loss of Inducer Motor Control	Air pressure is not modulating down at minimum inducer drive.
A08	Alert	Air Sensor Null Pressure Check out-of-tolerance	Air pressure sensor zero reading appears to be out-of-tolerance.
A11	Alert	Failed Ignition — split manifold burner	Failed Ignition, Split manifold burner, retries exhausted.
A15	Alert	Weak Flame Signal — split manifold	Weak Flame Signal, one or more split-manifold staged burners.
E01	1hr L/O	Failed Ignition	Four failed ignition attempts have occurred.
E02	10s L/O	Primary Limit Failure	Verify Primary Limit input at connector J8 and fuse at F1.
E03	10s L/O	Modulation Valve Failure	Valve Actuator did not reach a Park or Full On position.
E04	30s L/O	Air Sensor Failure — Pressure Reading Low	Includes insufficient air lockout due to blocked vent. Includes air switch failure to open during pre-purge switch check.
E05	30s L/O	Air Sensor Failure — Pressure Reading High	Includes air switch failure to close during pre-purge switch check.
E08	10s L/O	Improper Flame	
E09	0s L/O	No R-W Enable	An R-W open circuit is preventing the control from operating on a non-zero Firing Rate Demand or Firing Rate Input.
E11	10s L/O	1287 Lockout (L/O)	1287 L/O causes a 1285 L/O. Check 1287 control board LED state per the 1287 LED key below.
E13	10s L/O	Open fuse	
E18	10s L/O	1287 Improper Flame	Unexpected flame, Split manifold burner.
Eid	10s L/O	Invalid I.D. Plug Installed	

Return Air Smoke Detector

The return air smoke detector is designed to shut off the unit if smoke is sensed in the return air stream. Sampling the airflow entering the unit at the return air opening performs this function.

In order for the smoke detector to properly sense smoke in the return air stream, the air velocity entering the unit must be between 500 and 4000 feet per minute. Equipment covered in this manual will develop an airflow velocity that falls within these limits over the entire airflow range specified in the evaporator fan performance tables.

Compressor Start-Up

⚠ WARNING

Live Electrical Components!

Failure to follow all electrical safety precautions when exposed to live electrical components could result in death or serious injury.

When it is necessary to work with live electrical components, have a qualified licensed electrician or other individual who has been properly trained in handling live electrical components perform these tasks.

1. Attach a set of service gauges on the suction and discharge gauge ports for each circuit.

   Start unit in highest cooling test mode.

2. After the compressor and condenser fan have started and operated for approximately 30 minutes, observe the operating pressures. Compare the operating pressures to the label on the access panel.
3. Check system superheat. Follow the instruction listed on the superheat charging curve. Superheat should be within ±5ºF of the superheat chart value.
4. Repeat steps 1 through 4 for each refrigerant circuit.
5. To stop the SERVICE TEST, flip the main power disconnect switch **OFF** or proceed to the next component start-up procedure.

Hot Gas Reheat

⚠ WARNING

Live Electrical Components!

Failure to follow all electrical safety precautions when exposed to live electrical components could result in death or serious injury.
When it is necessary to work with live electrical components, have a qualified licensed electrician or other individual who has been properly trained in handling live electrical components perform these tasks.

1. Set the unit to Service Test step Reheat.
2. Once the unit is in the reheat test mode, verify the three way valve has shifted to the reheat position and that the supply temperature rises above cooling mode supply air temperature.
3. Monitor the suction pressure for 15 minutes. The suction pressure should remain within 5 psi of normal cooling operation.
4. Depending on the unit size/type and outdoor air temperature, the OD fan may run at a lower speed or not at all.
5. Exit Service Test if complete.

Final System Setup

After completing all of the pre-start and start-up procedures outlined in the previous sections (i.e., operating the unit in each of its modes through all available stages of cooling and heating), perform these final checks before leaving the unit.

1. Program the Night Setback (NSB) panel (if applicable) for proper unoccupied operation. Refer to the programming instructions for the specific panel.
2. Verify that the Remote panel **system** selection switch, **fan** selection switch, and zone temperature settings for automatic operation are correct.
3. Inspect the unit for misplaced tools, hardware, and debris.
4. Verify all exterior panels including the control panel doors and condenser grilles are secured in place.
5. Close the main disconnect switch or circuit protector switch that provides the supply power to the unit's terminal block or the unit mounted disconnect switch.

⚠ WARNING

Safety Alert!

Failure to follow instructions below could result in death or serious injury.
In addition to the following tasks, you MUST:

- **Follow all instructions in the unit's *Installation, Operation, and Maintenance* manual, including warnings, cautions, and notices.**
- **Perform all required tasks in any applicable Service Alerts and Service Bulletins.**
- **Review and understand all information provided in Submittals and Design Specifications.**

Maintenance

⚠ WARNING

Hazardous Service Procedures!

Failure to follow all precautions in this manual and on the tags, stickers, and labels could result in death or serious injury.

Technicians, in order to protect themselves from potential electrical, mechanical, and chemical hazards, MUST follow precautions in this manual and on the tags, stickers, and labels, as well as the following instructions: Unless specified otherwise, disconnect all electrical power including remote disconnect and discharge all energy storing devices such as capacitors before servicing. Follow proper lockout/tagout procedures to ensure the power can not be inadvertently energized. When necessary to work with live electrical components, have a qualified licensed electrician or other individual who has been trained in handling live electrical components perform these tasks.

Annual Maintenance

Clean and repaint any corroded surface.

Monthly Maintenance

Before completing the following checks, turn the unit **OFF** and lock the main power disconnect switch open.

⚠ WARNING

Hazardous Voltage!

Failure to disconnect power before servicing could result in death or serious injury.

Disconnect all electric power, including remote disconnects before servicing. Follow proper lockout/tagout procedures to ensure the power can not be inadvertently energized. Verify that no power is present with a voltmeter.

Filters

Inspect the return air filters. Clean or replace them if necessary. Refer to Table 1, p. 10 for the filter sizes.

Return Air Smoke Detector

Airflow through the unit is affected by the amount of dirt and debris accumulated on the indoor coil and filters. To verify airflow through the unit is adequate for proper sampling by the return air smoke detector, complete adherence to the maintenance procedures, including recommended intervals between filter changes, and coil cleaning is required.

Periodic checks and maintenance procedures must be performed on the smoke detector to confirm functionality. For detailed instructions concerning these checks and procedures, refer to the appropriate section(s) of the smoke detector Installation and Maintenance Instructions provided with the literature package for this unit.

Condensate Overflow Switch

During maintenance, the switch float (black ring) must be checked to confirm free movement up and down.

Cooling Season

- ☐ Check the unit drain pans and condensate piping to confirm that there are no blockages.
- ☐ Inspect the evaporator and condenser coils for dirt, bent fins, etc. If the coils appear dirty, clean them according to the instructions described in Coil Cleaning later in this section.
- ☐ Manually rotate the condenser fans to confirm free movement and check motor bearings for wear. Verify all of the fan mounting hardware is tight.
- ☐ Inspect the F/A-R/A damper hinges and pins to verify all moving parts are securely mounted. Keep the blades clean.
- ☐ Verify all damper linkages move freely and lubricate with white grease, if necessary.
- ☐ Check the supply fan motor bearings and repair or replace the motor as necessary.
- ☐ Verify all wire terminal connections are tight.
- ☐ Remove any corrosion present on the exterior surfaces of the unit and repaint these areas.
- ☐ Generally inspect the unit for unusual conditions (e.g., loose access panels, leaking piping connections, etc.)
- ☐ Confirm that all retaining screws are reinstalled in the unit access panels once these checks are complete.
- ☐ With the unit running, check and record the following:
  - Ambient temperature
  - Compressor suction and discharge pressures (each circuit)
  - Superheat (each circuit)

Record this data on an operator's maintenance log. See Table 23, p. 75. If the operating pressures indicate a refrigerant shortage, measure the system superheat. For guidelines, see “,”.

Important: *Do not release refrigerant to the atmosphere! If adding or removing refrigerant is required, the service technician must comply with all federal, state and local laws.*

Heating Season

- ☐ Inspect the unit air filters. If necessary, clean or replace them.
- ☐ Check supply fan motor bearings and repair or replace the motor as necessary.

- ☐ Inspect both the main unit control panel and heat section control box for loose electrical components and terminal connections, as well as damaged wire insulation. Make any necessary repairs.
- ☐ Verify the heating systems operate properly.

Coil Cleaning

Regular coil maintenance, including annual cleaning, enhances the unit's operating efficiency by minimizing the following:

- Compressor head pressure and amperage draw
- Evaporator water carryover
- Fan brake horsepower due to increased static pressure losses
- Airflow reduction

⚠ WARNING

Hazardous Chemicals!

Failure to follow this safety precaution could result in death or serious injury. Coil cleaning agents can be either acidic or highly alkaline and can burn severely if contact with skin or eyes occurs.

Handle chemical carefully and avoid contact with skin. ALWAYS wear Personal Protective Equipment (PPE) including goggles or face shield, chemical resistant gloves, boots, apron or suit as required. For personal safety refer to the cleaning agent manufacturer's Materials Safety Data Sheet and follow all recommended safe handling practices.

At least once each year, or more often if the unit is located in a dirty environment, clean the condenser coils using the instructions below. Follow these instructions as closely as possible to avoid damaging the coils.

Note: *For units equipped with hail guards follow removal procedure listed below.*

Hail Guard Removal

1. Remove shipping screws (ones without washers).
2. Lift hail guards up so screws with washers go to bottom of keyhole.
3. Remove hailguard by sliding washer head screw through keyhole.

Microchannel (MCHE) Coils

NOTICE

Coil Damage!

Failure to follow instructions below could result in coil damage.

DO NOT use any detergents with microchannel condenser coils.

Use pressurized water or air ONLY, with pressure no greater than 600psi.

For additional information regarding the proper microchannel coil cleaning procedure, refer to RT-SVB83*-EN

- Due to the soft material and thin walls of the MCHE coils, the traditional field maintenance method recommended for Round Tube Plate Fin (RTPF) coils does not apply to microchannel coils.
- Chemical cleaners are a risk factor to MCHE due to the material of the coil.
- The manufacturer does not recommend the use of chemical cleaners to clean microchannel coils. Using chemical cleaners could lead to warranty claims being further evaluated for validity and failure analysis.

The recommended cleaning method for microchannel condenser coils is pressurized water or air with a non-pinpoint nozzle and an ECU of at least 180 with pressure no greater than 600 psi. To minimize the risk of coil damage, approach the cleaning of the coil with the pressure washer aimed perpendicular to the face of the coil during cleaning.

Note: *For more details on microchannel coil cleaning, please see Unitary Light and Large Commercial Unit Microchannel Coil Servicing Guidelines (RT-SVB83*-EN).*

Hail Guard Reinstallation

Reinstall hail guards by aligning the keyholes over the washer screw heads, and slide into place. If the installation requires seismic or special wind load compliance, reinstall shipping screws.

Hot Gas Reheat Additional Oil

NOTICE

Compressor Damage!

Use of incorrect refrigerant and oil could result in compressor damage and improper unit operation.

Use only refrigerant and oil specified on the unit nameplate.

Additional refrigerant oil has been added in the factory for all 6 to 25 ton hot gas reheat units. The 3 to 5 ton, standard efficiency, hot gas reheat units do not have additional oil. If major components (coil, valve assembly, or others.) are replaced or serviced, the following steps must be taken.

1. Measure the amount of oil removed during servicing.

2. When recharging the unit after servicing, replace the amount of oil removed. Verify oil added is the correct type.
3. For compressor replacements and/or additional questions, contact Technical Support.

Final Process

For future reference, record the unit data below in the blanks provided.

Table 22. Unit data log

Complete Unit Model Number	
Unit Serial Number	
Wiring Diagram Numbers (from unit control panel)	
Connections	
Schematics	

Table 23. Sample maintenance log

Date	Current Ambient Temp F/C	Refrigerant Circuit #1						Refrigerant Circuit #2					
		Compr. Oil Level	Suct. Press. Psig/ kPa	Disch. Press Psig/ kPa	Liquid Press Psig/ kPa	Super-heat F/ C	Sub-cool F/C	Compr. Oil Level	Suct. Press. Psig/ kPa	Disch. Press Psig/ kPa	Liquid Press Psig/ kPa	Super-heat F/ C	Sub-cool F/C
		- ok - low						- ok - low					
		- ok - low						- ok - low					
		- ok - low						- ok - low					
		- ok - low						- ok - low					
		- ok - low						- ok - low					
		- ok - low						- ok - low					

Note: *Check and record the data requested above each month during the cooling season with the unit running.*

Troubleshooting

Refer to the *Application Guide Symbio™ 700 Controller with Precedent™ Packaged Rooftop Air-Conditioners* (ACC-APG002*-EN).

Wiring Diagrams

Note: *Wiring diagrams can be accessed using e-Library by entering the diagram number in the literature order number search field or by contacting technical support.*

Table 24. Wiring diagrams

Schematic Type	Controls	Voltage	Schematic	Description
Main Unit	Symbio 700	All	12134793	SCHEMATIC; SHEET 1, POWER, SINGLE COMPRESSOR, SINGLE CONDENSER FAN, W/O ODM CONTROL, STD SCCR
Main Unit	Symbio 700	All	12134794	SCHEMATIC; SHEET 1, POWER, SINGLE COMPRESSOR, SINGLE CONDENSER FAN, STD SCCR
Main Unit	Symbio 700	All	12135032	SCHEMATIC; SHEET 1, POWER, SINGLE COMPRESSOR, SINGLE VS CONDENSER FAN, STD SCCR, A CAB
Main Unit	Symbio 700	All	12134334	SCHEMATIC; SHEET 1, POWER, DUAL COMPRESSOR, DUAL CONDENSER FAN, STD SCCR
Main Unit	Symbio 700	All	12134796	SCHEMATIC; SHEET 1, POWER, SINGLE COMPRESSOR, SINGLE CONDENSER FAN, W/O ODM CONTROL, HIGH SCCR
Main Unit	Symbio 700	All	12134797	SCHEMATIC; SHEET 1, POWER, SINGLE COMPRESSOR, SINGLE CONDENSER FAN, HIGH SCCR
Main Unit	Symbio 700	All	12135033	SCHEMATIC; SHEET 1, POWER, SINGLE COMPRESSOR, SINGLE VS CONDENSER FAN, HIGH SCCR, A CAB
Main Unit	Symbio 700	All	12134336	SCHEMATIC; SHEET 1, POWER, DUAL COMPRESSOR, DUAL CONDENSER FAN, HIGH SCCR
Main Unit	Symbio 700	All	12134991	SCHEMATIC; SHEET 1, POWER, SINGLE COMPRESSOR, SINGLE CONDENSER FAN, STD SCCR
Main Unit	Symbio 700	All	12134992	SCHEMATIC; SHEET 1, POWER, SINGLE COMPRESSOR, SINGLE CONDENSER FAN, HIGH SCCR
Main Unit	Symbio 700	All	12135028	SCHEMATIC; SHEET 1, POWER, SINGLE COMPRESSOR, SINGLE VS CONDENSER FAN, STD SCCR
Main Unit	Symbio 700	All	12135029	SCHEMATIC; SHEET 1, POWER, SINGLE COMPRESSOR, SINGLE VS CONDENSER FAN, HIGH SCCR
Main Unit	Symbio 700	All	12134887	SCHEMATIC; SHEET 1, POWER, DUAL COMPRESSOR, SINGLE CONDENSER FAN, STD SCCR
Main Unit	Symbio 700	All	12134888	SCHEMATIC; SHEET 1, POWER, DUAL COMPRESSOR, SINGLE CONDENSER FAN, HIGH SCCR
Main Unit	Symbio 700	All	12134939	SCHEMATIC; SHEET 1, POWER, DUAL COMPRESSOR, SINGLE VS CONDENSER FAN, STD SCCR
Main Unit	Symbio 700	All	12134940	SCHEMATIC; SHEET 1, POWER, DUAL COMPRESSOR, SINGLE VS CONDENSER FAN, HIGH SCCR
Main Unit	Symbio 700	All	12134799	SCHEMATIC; SHEET 2, POWER, SINGLE INDOOR FAN, COOLING ONLY/ ELECTRIC HEAT, STD SCCR, MULTI-TAP MOTOR
Main Unit	Symbio 700	230V	12134800	SCHEMATIC; SHEET 2, POWER, SINGLE INDOOR FAN, 2-STAGE GAS HEAT, 230V, STD SCCR, MULTI-TAP MOTOR
Main Unit	Symbio 700	460V/575V	12134801	SCHEMATIC; SHEET 2, POWER, SINGLE INDOOR FAN, 2-STAGE GAS HEAT, 460V/575V, STD SCCR, MULTI-TAP MOTOR
Main Unit	Symbio 700	All	12134802	SCHEMATIC; SHEET 2, POWER, SINGLE INDOOR FAN, COOLING ONLY/ ELECTRIC HEAT, HIGH SCCR, MULTI-TAP MOTOR
Main Unit	Symbio 700	230V	12134803	SCHEMATIC; SHEET 2, POWER, SINGLE INDOOR FAN, 2-STAGE GAS HEAT, 230V, HIGH SCCR, MULTI-TAP MOTOR
Main Unit	Symbio 700	460V/575V	12134804	SCHEMATIC; SHEET 2, POWER, SINGLE INDOOR FAN, 2-STAGE GAS HEAT, 460V/575V, HIGH SCCR, MULTI-TAP MOTOR

Table 24. Wiring diagrams (continued)

Schematic Type	Controls	Voltage	Schematic	Description
Main Unit	Symbio 700	All	12134983	SCHEMATIC; SHEET 2, POWER, SINGLE INDOOR FAN, COOLING ONLY/ ELECTRIC HEAT, STD SCCR, FORWARD CURVE FAN
Main Unit	Symbio 700	All	12134984	SCHEMATIC; SHEET 2, POWER, SINGLE INDOOR FAN, COOLING ONLY/ ELECTRIC HEAT, HIGH SCCR, FORWARD CURVE FAN
Main Unit	Symbio 700	230V	12134985	SCHEMATIC; SHEET 2, POWER, SINGLE INDOOR FAN, 2 STAGE GAS HEAT, 230V STD SCCR, FORWARD CURVE FAN
Main Unit	Symbio 700	460V	12134986	SCHEMATIC; SHEET 2, POWER, SINGLE INDOOR FAN, 2 STAGE GAS HEAT, 460V STD SCCR, FORWARD CURVE FAN
Main Unit	Symbio 700	230V	12134987	SCHEMATIC; SHEET 2, POWER, SINGLE INDOOR FAN, 2 STAGE GAS HEAT, 230V HIGH SCCR, FORWARD CURVE FAN
Main Unit	Symbio 700	460V	12134988	SCHEMATIC; SHEET 2, POWER, SINGLE INDOOR FAN, 2 STAGE GAS HEAT, 460V HIGH SCCR, FORWARD CURVE FAN
Main Unit	Symbio 700	230V	12134989	SCHEMATIC; SHEET 2, POWER, SINGLE INDOOR FAN, LOW NOX GAS HEAT, 230V STD SCCR
Main Unit	Symbio 700	460V	12134990	SCHEMATIC; SHEET 2, POWER, SINGLE INDOOR FAN, LOW NOX GAS HEAT, 460V STD SCCR
Main Unit	Symbio 700	230V	12134993	SCHEMATIC; SHEET 2, POWER, SINGLE INDOOR FAN, LOW NOX GAS HEAT, 230V HIGH SCCR
Main Unit	Symbio 700	460V	12134994	SCHEMATIC; SHEET 2, POWER, SINGLE INDOOR FAN, LOW NOX GAS HEAT, 460V HIGH SCCR
Main Unit	Symbio 700	230V	12134727	SCHEMATIC; SHEET 2, POWER, SINGLE INDOOR FAN, MOD GAS HEAT, 230V, STD SCCR
Main Unit	Symbio 700	460V/575V	12134728	SCHEMATIC; SHEET 2, POWER, SINGLE INDOOR FAN, MOD GAS HEAT, 460V/575V, STD SCCR
Main Unit	Symbio 700	All	12134921	SCHEMATIC; SHEET 2, POWER, SINGLE INDOOR FAN, COOLING ONLY/ ELECTRIC HEAT, STD SCCR
Main Unit	Symbio 700	230V	12134922	SCHEMATIC; SHEET 2, POWER, SINGLE INDOOR FAN, 2-STAGE GAS HEAT, 230V, STD SCCR
Main Unit	Symbio 700	460V/575V	12134941	SCHEMATIC; SHEET 2, POWER, SINGLE INDOOR FAN, 2-STAGE GAS HEAT, 460V/575V, STD SCCR
Main Unit	Symbio 700	All	12134942	SCHEMATIC; SHEET 2, POWER, SINGLE INDOOR FAN, COOLING ONLY/ ELECTRIC HEAT, HIGH SCCR
Main Unit	Symbio 700	230V	12134943	SCHEMATIC; SHEET 2, POWER, SINGLE INDOOR FAN, 2-STAGE GAS HEAT, 230V, HIGH SCCR
Main Unit	Symbio 700	460V/575V	12134944	SCHEMATIC; SHEET 2, POWER, SINGLE INDOOR FAN, 2-STAGE GAS HEAT, 460V/575V, HIGH SCCR
Main Unit	Symbio 700	230V	12134951	SCHEMATIC; SHEET 2, POWER, SINGLE INDOOR FAN, MOD GAS HEAT, 230V, STD SCCR
Main Unit	Symbio 700	460V/575V	12134952	SCHEMATIC; SHEET 2, POWER, SINGLE INDOOR FAN, MOD GAS HEAT, 460V/575V, STD SCCR
Main Unit	Symbio 700	230V	12134953	SCHEMATIC; SHEET 2, POWER, SINGLE INDOOR FAN, MOD GAS HEAT, 230V, HIGH SCCR
Main Unit	Symbio 700	460V/575V	12134954	SCHEMATIC; SHEET 2, POWER, SINGLE INDOOR FAN, MOD GAS HEAT, 460V/575V, HIGH SCCR
Main Unit	Symbio 700	All	12134827	SCHEMATIC; SHEET 2, POWER, DUAL INDOOR FAN, COOLING ONLY/ ELECTRIC HEAT, STD SCCR
Main Unit	Symbio 700	230V	12134828	SCHEMATIC; SHEET 2, POWER, DUAL INDOOR FAN, 2-STAGE GAS HEAT, 230V, STD SCCR
Main Unit	Symbio 700	460V/575V	12134829	SCHEMATIC; SHEET 2, POWER, DUAL INDOOR FAN, 2-STAGE GAS HEAT, 460V/575V, STD SCCR

Table 24. Wiring diagrams (continued)

Schematic Type	Controls	Voltage	Schematic	Description
Main Unit	Symbio 700	All	12134830	SCHEMATIC; SHEET 2, POWER, DUAL INDOOR FAN, COOLING ONLY/ ELECTRIC HEAT, HIGH SCCR
Main Unit	Symbio 700	230V	12134831	SCHEMATIC; SHEET 2, POWER, DUAL INDOOR FAN, 2-STAGE GAS HEAT, 230V, HIGH SCCR
Main Unit	Symbio 700	460V/575V	12134832	SCHEMATIC; SHEET 2, POWER, DUAL INDOOR FAN, 2-STAGE GAS HEAT, 460V/575V, HIGH SCCR
Main Unit	Symbio 700	230V	12134833	SCHEMATIC; SHEET 2, POWER, DUAL INDOOR FAN, MOD GAS HEAT, 230V, STD SCCR
Main Unit	Symbio 700	460V/575V	12134834	SCHEMATIC; SHEET 2, POWER, DUAL INDOOR FAN, MOD GAS HEAT, 460V/575V, STD SCCR
Main Unit	Symbio 700	230V	12134835	SCHEMATIC; SHEET 2, POWER, DUAL INDOOR FAN, MOD GAS HEAT, 230V, HIGH SCCR
Main Unit	Symbio 700	460V/575V	12134836	SCHEMATIC; SHEET 2, POWER, DUAL INDOOR FAN, MOD GAS HEAT, 460V/575V, HIGH SCCR
Main Unit	Symbio 700	All	12134805	SCHEMATIC; SHEET 3, CONTROLS, SYMBIO 700 UNIT CONTROLS
Main Unit	Symbio 700	All	12134851	SCHEMATIC; SHEET 3, CONTROLS, SYMBIO 700 UNIT CONTROLS
Main Unit	Symbio 700	All	12135030	SCHEMATIC; SHEET 3, CONTROLS, SYMBIO 700 UNIT CONTROLS
Main Unit	Symbio 700	All	12134443	SCHEMATIC; SHEET 4, CONTROLS, ADAPTER BOARD UNIT CONTROLS, DUAL COMPRESSOR, SINGLE FAN
Main Unit	Symbio 700	All	12134444	SCHEMATIC; SHEET 4, CONTROLS, ADAPTER BOARD UNIT CONTROLS, DUAL COMPRESSOR, DUAL FAN
Main Unit	Symbio 700	All	12135020	SCHEMATIC; SHEET 4, CONTROLS, ADAPTER BOARD UNIT CONTROLS, DUAL COMPRESSOR, DUAL FAN
Main Unit	Symbio 700	All	12134807	SCHEMATIC; SHEET 4, CONTROLS, ADAPTER BOARD UNIT CONTROLS, SINGLE COMPRESSOR, SINGLE FAN
Main Unit	Symbio 700	All	12134825	SCHEMATIC; SHEET 4, CONTROLS, ADAPTER BOARD UNIT CONTROLS, SINGLE COMPRESSOR, SINGLE FAN
Main Unit	Symbio 700	All	12134826	SCHEMATIC; SHEET 4, CONTROLS, ADAPTER BOARD UNIT CONTROLS, SINGLE COMPRESSOR, SINGLE FAN
Main Unit	Symbio 700	All	12134963	SCHEMATIC; SHEET 4, CONTROLS, ADAPTER BOARD UNIT CONTROLS, DUAL COMPRESSOR, SINGLE FAN, VS OUTDOOR FAN
Main Unit	Symbio 700	All	12134445	SCHEMATIC; SHEET 5, CONTROLS, INDOOR OPTIONS
Main Unit	Symbio 700	All	12134438	SCHEMATIC; SHEET 6, CONTROLS, FRESH AIR OPTIONS
Main Unit	Symbio 700	All	12134809	SCHEMATIC; SHEET 6, CONTROLS, FRESH AIR OPTIONS, A CAB
Main Unit	Symbio 700	All	12134446	SCHEMATIC; SHEET 7, CONTROLS, CUSTOMER CONNECTION OPTIONS
Main Unit	Symbio 700	All	12134810	SCHEMATIC; SHEET 7, CONTROLS, CUSTOMER CONNECTION OPTIONS, A CAB
Main Unit	Symbio 700	All	12134447	SCHEMATIC; SHEET 8, CONTROLS,STEPPER MOTOR CONTROLLER
Main Unit	Symbio 700	All	12134811	SCHEMATIC; SHEET 8, CONTROLS,STEPPER MOTOR CONTROLLER, A CAB
Main Unit	Symbio 700	All	12134448	SCHEMATIC; SHEET 9, CONTROLS, XM30/XM32 EXPANSION MODULES
Main Unit	Symbio 700	All	12134812	SCHEMATIC; SHEET 9, CONTROLS, XM30/XM32 EXPANSION MODULE, A CAB
Main Unit	Symbio 700	All	X39004472001	LABEL; FUSE TABLE, UNIT LEVEL (T,Y,W,D,G SE/HE 3-25T)
Electric Heat	Symbio 700	230V	12134813	SCHEMATIC/COMPONENT LOCATION - ELECTRIC HEAT - 6 & 12 & 18 & 23 KW 208/240V

Table 24. Wiring diagrams (continued)

Schematic Type	Controls	Voltage	Schematic	Description
Electric Heat	Symbio 700	460V/575V	12134814	SCHEMATIC/COMPONENT LOCATION - ELECTRIC HEAT - 6 & 12 & 18 & 23 KW 460V/575V
Electric Heat	Symbio 700	230V	12134301	SCHEMATIC/COMPONENT LOCATION - ELECTRIC HEAT - 9 & 18 KW 208/240V
Electric Heat	Symbio 700	230V	12134302	SCHEMATIC/COMPONENT LOCATION - ELECTRIC HEAT - 27 & 36 KW 208/240V
Electric Heat	Symbio 700	230V	12134303	SCHEMATIC/COMPONENT LOCATION - ELECTRIC HEAT - 54 KW 208/240V
Electric Heat	Symbio 700	460V/575V	12134304	SCHEMATIC/COMPONENT LOCATION - ELECTRIC HEAT - 9 & 18 KW 460V/575V
Electric Heat	Symbio 700	460V/575V	12134305	SCHEMATIC/COMPONENT LOCATION - ELECTRIC HEAT - 27 & 36 KW 460V/575V
Electric Heat	Symbio 700	460V/575V	12134306	SCHEMATIC/COMPONENT LOCATION - ELECTRIC HEAT - 54 KW 460V/575V
Electric Heat	Symbio 700	230V	12134307	SCHEMATIC/COMPONENT LOCATION - ELECTRIC HEAT - 18 KW 208/240V
Electric Heat	Symbio 700	230V	12134308	SCHEMATIC/COMPONENT LOCATION - ELECTRIC HEAT - 36 KW 208/240V
Electric Heat	Symbio 700	230V	12134309	SCHEMATIC/COMPONENT LOCATION - ELECTRIC HEAT - 54 & 72 KW 208/240V
Electric Heat	Symbio 700	460V/575V	12134310	SCHEMATIC/COMPONENT LOCATION - ELECTRIC HEAT - 18 KW 460V/575V
Electric Heat	Symbio 700	460V/575V	12134311	SCHEMATIC/COMPONENT LOCATION - ELECTRIC HEAT - 36 KW 460V/575V
Electric Heat	Symbio 700	460V/575V	12134312	SCHEMATIC/COMPONENT LOCATION - ELECTRIC HEAT - 54 & 72 KW 460V/575V
Electric Heat	Symbio 700	230V	X39004311001	LABEL; FUSE REPLACEMENT, ELECTRIC HEAT, 300V
Electric Heat	Symbio 700	460V/575V	X39004311002	LABEL; FUSE REPLACEMENT, ELECTRIC HEAT, 600V
Electric Heat	Symbio 700	230V	X39004473001	LABEL; FUSE REPLACEMENT, ELECTRIC HEAT, 300V, A CAB
Electric Heat	Symbio 700	460V/575V	X39004473002	LABEL; FUSE REPLACEMENT, ELECTRIC HEAT, 600V, A CAB
Component Location	Symbio 700	All	12134815	DIAGRAM; COMPONENT LOCATION, COOLING/ELECTRIC, A CABINET
Component Location	Symbio 700	All	12134816	DIAGRAM; COMPONENT LOCATION, GAS, A CABINET
Component Location	Symbio 700	All	12135012	DIAGRAM; COMPONENT LOCATION, LOW NOX, B CABINET
Component Location	Symbio 700	All	12134972	DIAGRAM; COMPONENT LOCATION, COOLING/ELECTRIC, B CABINET
Component Location	Symbio 700	All	12134973	DIAGRAM; COMPONENT LOCATION, GAS, B CABINET
Component Location	Symbio 700	All	12134974	DIAGRAM; COMPONENT LOCATION, COOLING/ELECTRIC, C CABINET
Component Location	Symbio 700	All	12134975	DIAGRAM; COMPONENT LOCATION, GAS, C CABINET
Component Location	Symbio 700	All	12134976	DIAGRAM; COMPONENT LOCATION, MOD GAS, B CABINET
Component Location	Symbio 700	All	12134977	DIAGRAM; COMPONENT LOCATION, MOD GAS, C CABINET
Component Location	Symbio 700	All	12134854	DIAGRAM; COMPONENT LOCATION, COOLING/ELECTRIC, D CABINET

Table 24. Wiring diagrams (continued)

Schematic Type	Controls	Voltage	Schematic	Description
Component Location	Symbio 700	All	12134855	DIAGRAM; COMPONENT LOCATION, GAS, D CABINET
Component Location	Symbio 700	All	12134858	DIAGRAM; COMPONENT LOCATION, MOD GAS, D CABINET
Supplimental	Symbio 700	All	12134327	DIAGRAM; POWER EXHAUST
Supplimental	Symbio 700	All	12134352	LABEL; DIAGRAM, LOW AMBIENT
Supplimental	Symbio 700	All	12134461	DIAGRAM; SCHEMATIC - CONVENIENCE OUTLET OPTION
Supplimental	Symbio 700	All	X39004319001	LABEL; FUSE REPLACEMENT, CONVENIENCE OUTLET

Piping Diagrams

Figure 93. Piping diagram – 3 to 5 tons standard efficiency (T/YSK036-060) and 3 to 5 ton high efficiency (T/YHK036-060)

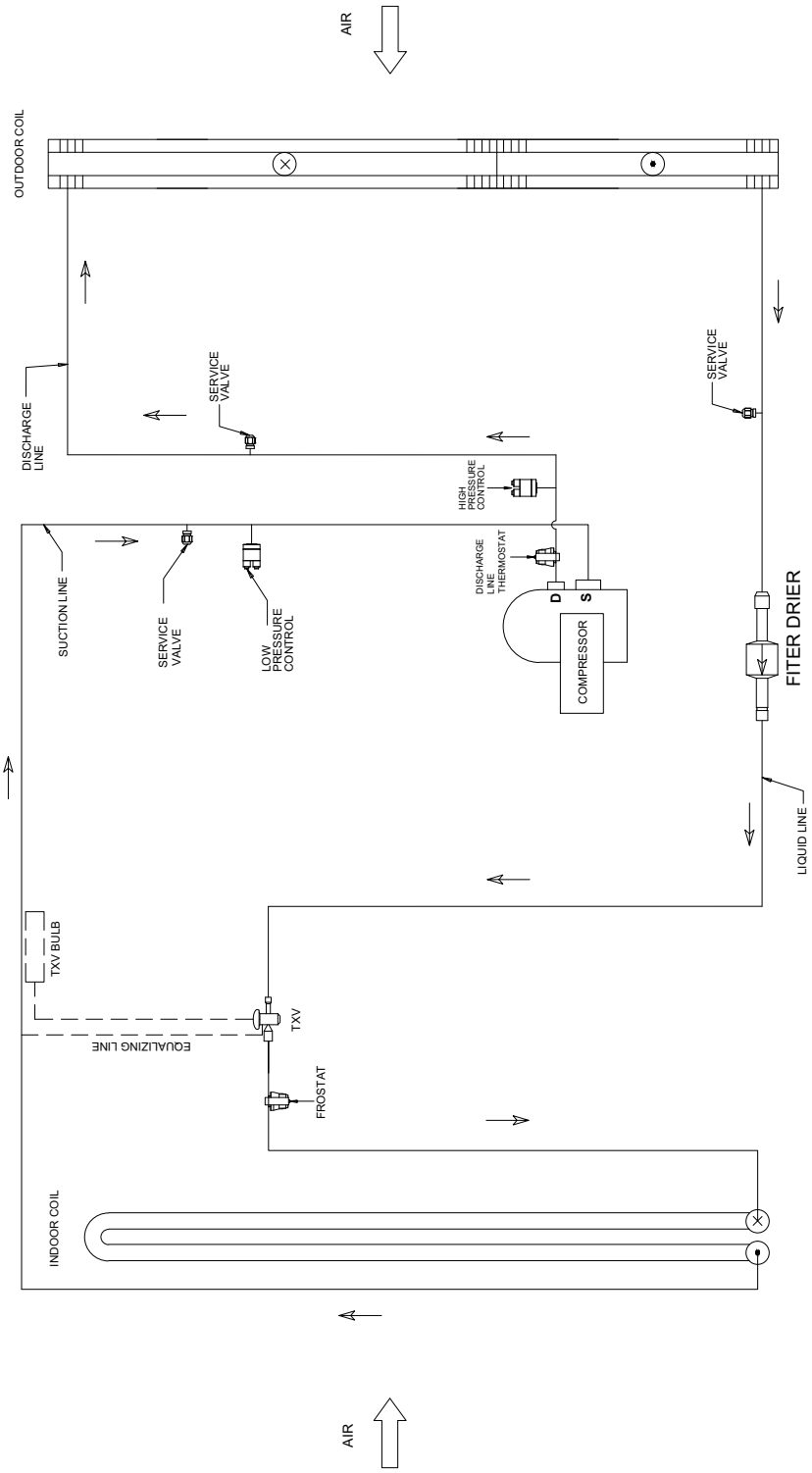

Figure 94. Piping diagram – 3 to 5 tons standard efficiency (T/YSK036-060) and 3 to 5 ton high efficiency (T/YHK036-060) - hot gas reheat

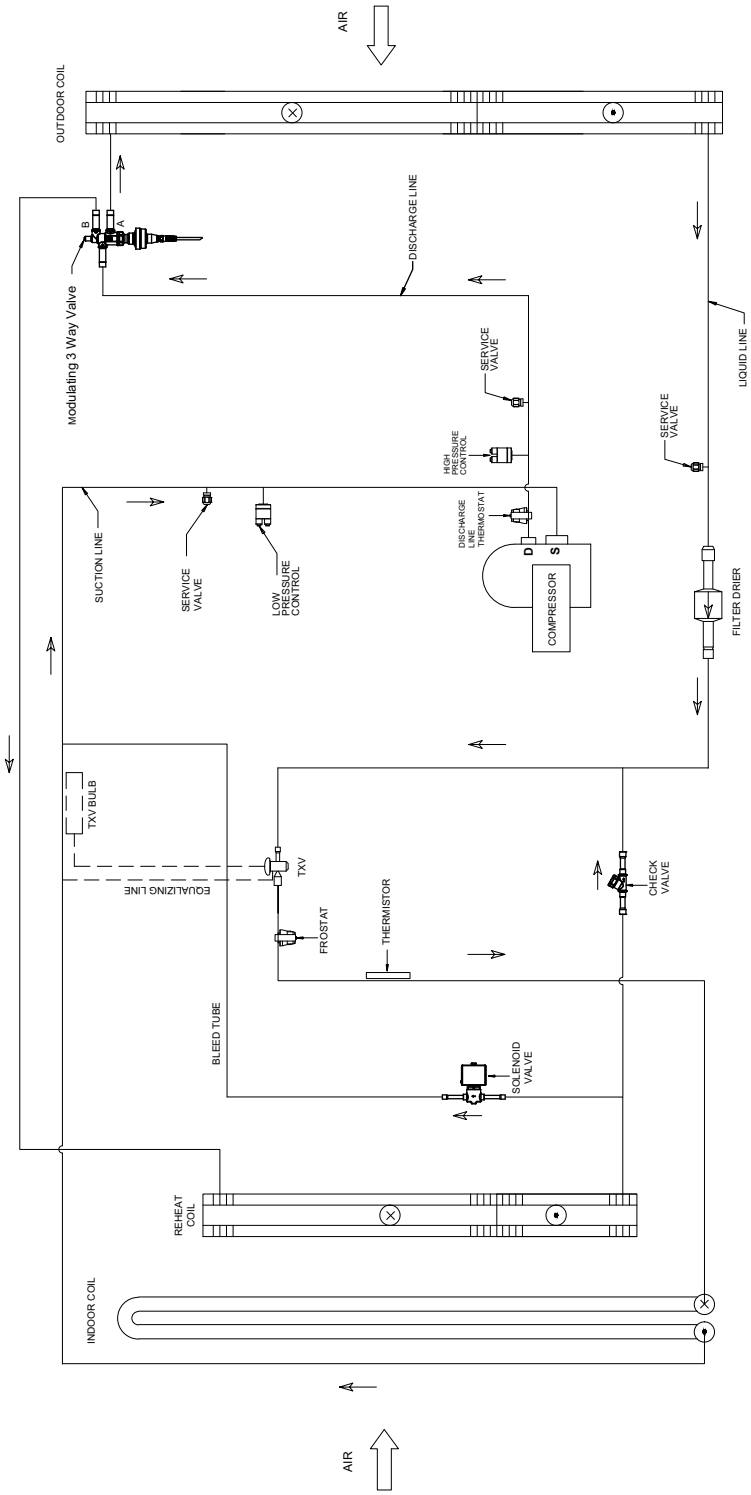

Figure 95. Piping diagram – 6 to 10 tons (T/Y)(S/H)K(072-120), and 12.5 tons standard efficiency (T/Y)SK150

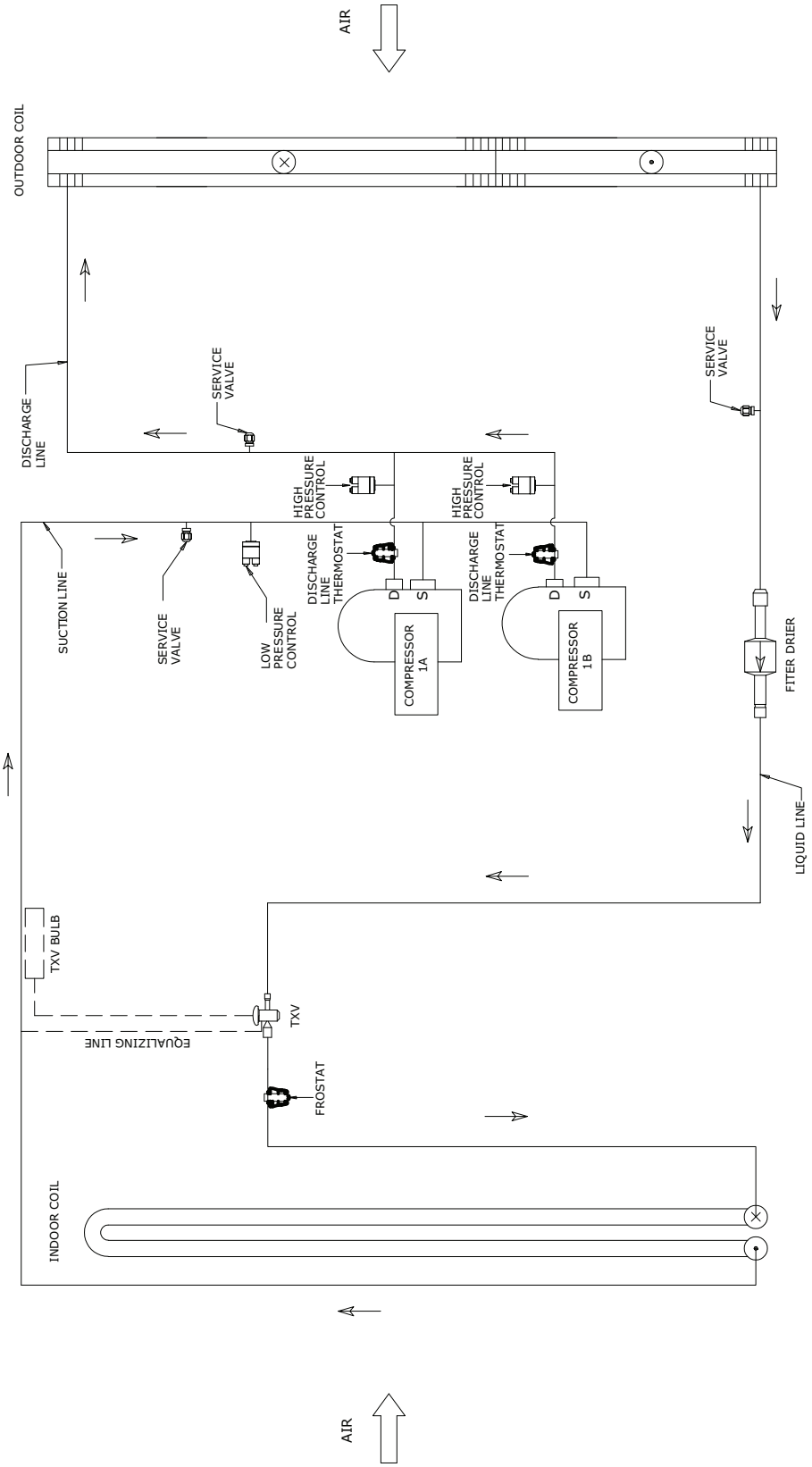

Figure 96. Piping diagram 6 to 10 tons (T/Y)(S/H)K(072-120), and 12.5 tons standard efficiency (T/Y)SK150 - hot gas reheat

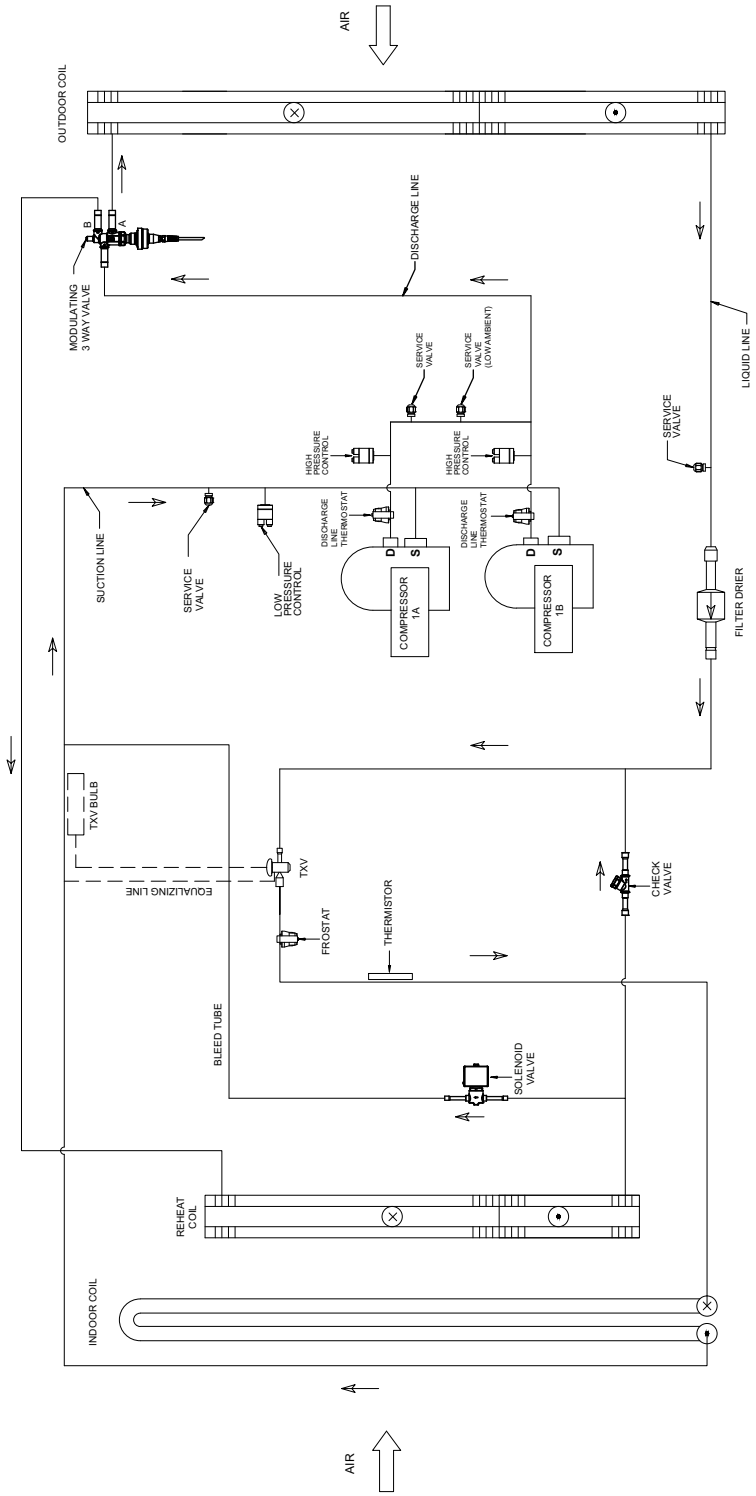

Figure 97. Piping diagram - 12.5 tons high efficiency (T/Y)HK150 and 15 to 25 tons standard and high efficiency (T/Y)(S/H)K(180-300)

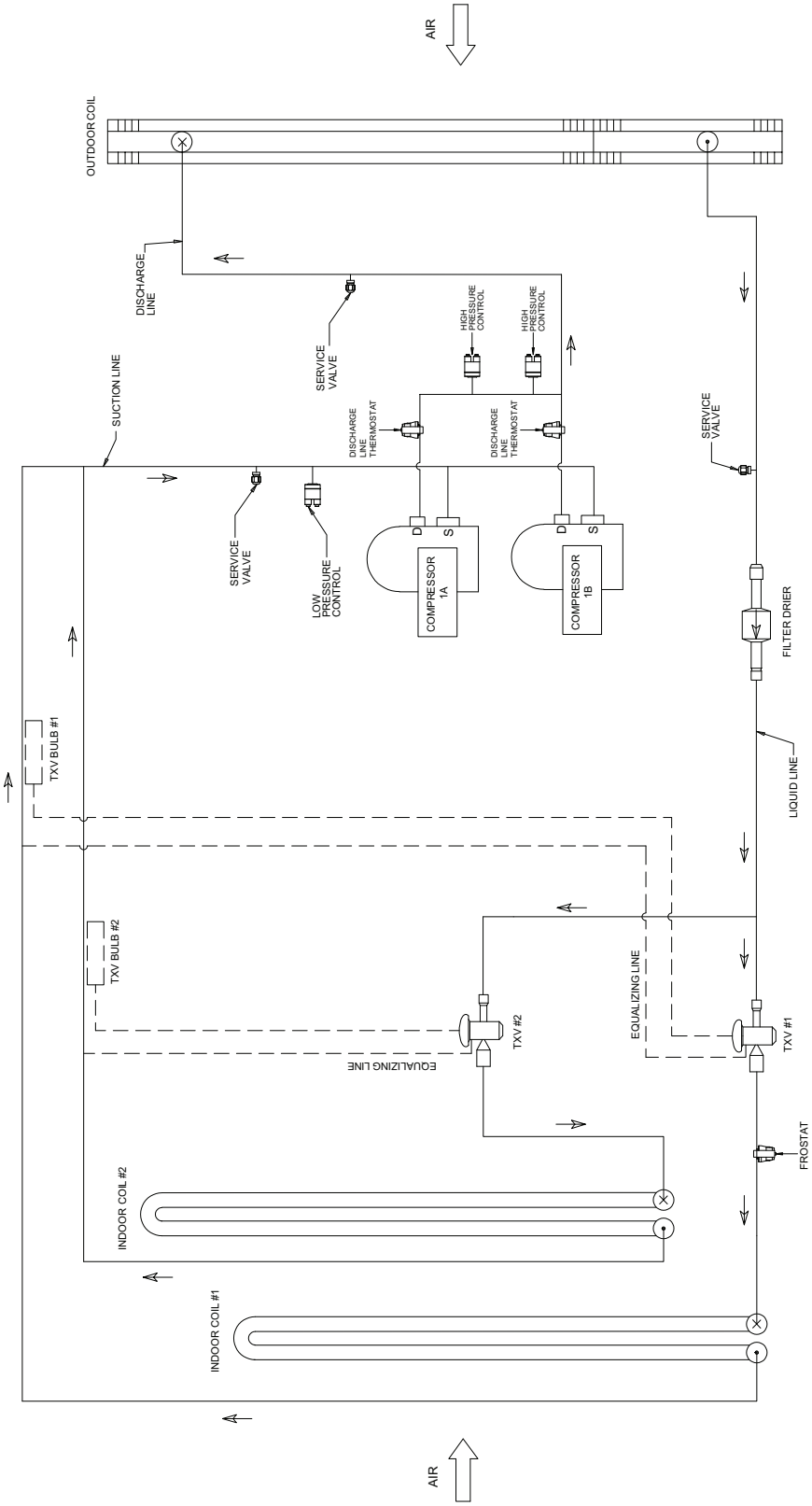

Figure 98. Piping diagram - 12.5 tons high efficiency (T/Y)HK150 and 15 to 25 tons standard and high efficiency (T/Y)(S/H)K(180-300) - Hot gas reheat

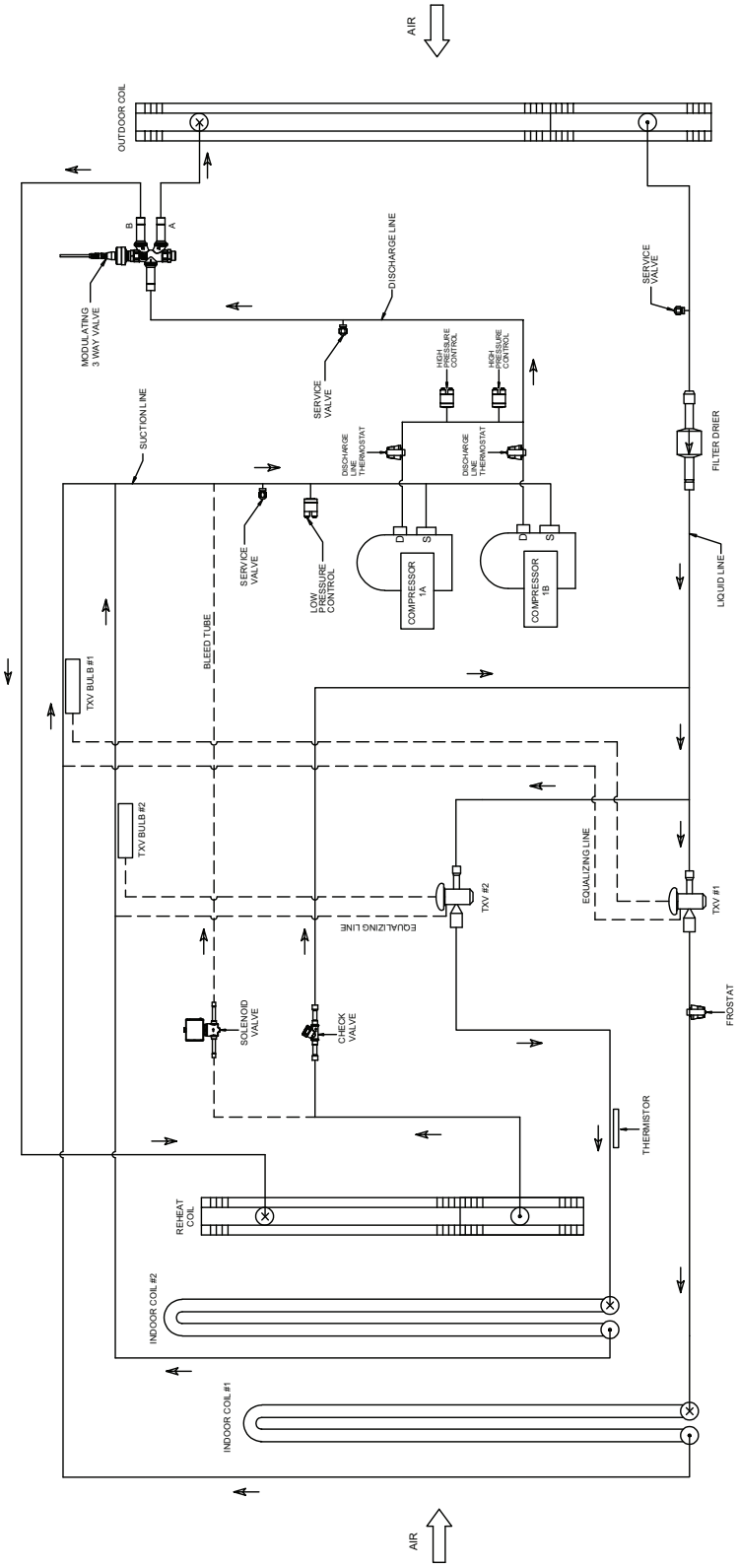

Gas Heat Operation and Maintenance

Gas Heat Unit General Information

⚠ WARNING

Hazard of Explosion or Fire!

Failure to follow instructions could result in death or serious injury and equipment or property damage.

Do not store or use gasoline or other flammable vapors and liquids in the vicinity of this or any other appliance.

IF YOU SMELL GAS, follow instructions below:

- **Do not try to light any appliance.**
- **Do not touch any electrical switch.**
- **Do not use any phone in your building.**
- **Open windows and doors.**
- **Alert others and evacuate building immediately.**
- **From a phone outside of the building, immediately call your gas supplier. Follow the gas supplier's instructions. If you cannot reach your gas supplier, call the fire department.**

⚠ WARNING

Safety Hazards!

Failure to follow instructions below could result in death or serious injury and equipment or property damage.

- **Do not use this furnace if any portion has been under water as it may have rendered the unit hazardous to operate. Immediately call a qualified service technician to inspect the furnace and to replace any part or the control system and any gas control which has been under water.**
- **Should overheating occur, or the unit gas valve fail to shut off, close the gas valve to the furnace before shutting off the electrical supply.**

⚠ WARNING

Safety Hazards!

Failure to follow instructions below could result in death or serious injury.

- **Never perform any maintenance procedures until the electrical power to the unit is turned off.**
- **Never perform any maintenance procedures until the gas valve to the gas supply is turned off.**
- **Never remove any panels from the unit while it is operating.**
- **Never remove panels or parts from the unit that are not discussed in this manual.**
- **Never cover the unit, since it is designed to operate year round.**

The unit has a complex design. To verify it performs safely and gives long lasting services, some of the maintenance work must be performed by a qualified service person.

When a service person is referred to in this manual, this is a service technician who has had special training or a number of years experience in servicing this type of equipment. It is your responsibility to select a qualified service company that can provide a service person of this caliber.

Notes:

- *Do not operate the unit without filters.*
- *See Table 1, p. 10 for filter sizes.*
- *Remove filter access panel to access filters.*
- *For thermostat operation, see "Thermostat," p. 11.*

Heating System

Heating Cycle Operation

The unit heating system is a solid-state electronic ignition control that lights the furnace burners each time the thermostat calls for heat. At the end of each heating cycle the furnace burners are extinguished. This type of system is called Direct Spark Ignition (DSI).

A normal heating cycle begins when the air temperature drops below the thermostat setting. The thermostat then energizes the heating electrical circuit that starts and controls the furnace burners. Shortly after the burners ignite the indoor fan starts and circulates warm air through the conditioned space.

When the air temperature rises to the thermostat setting the thermostat deenergizes the heating electrical circuit, which in turn extinguishes the burners. The indoor fan continues to circulate warm air until most of the heat is removed from the unit's combustion chamber.

Safety Controls

- The unit is equipped with an automatic reset safety limit control to prevent overheating. When the control opens, it shuts down the heating electrical circuit until the unit cools down sufficiently. Inadequate airflow (i.e., caused by dirty filters or defective fan motor) may cause the unit to cycle on and off as the limit trips and automatically resets. If the unit is cycling on its limit control, immediately contact a service person for instructions.
- If flames from the burner are not properly drawn into the heat exchanger, a flame rollout protection control will open causing the furnace to shut off. The cause must be investigated by a qualified service person.
- If installed, the condensate overflow switch will shut down the unit before a drain pan overflow occurs.

Heating System Start-Up

Because the unit has an automatic ignition system, it is easy to start the heating cycle at the beginning of the heating season. In order for the unit to operate properly and safely, the furnace needs air for both combustion and ventilation. Verify all air openings are unobstructed and there is adequate clearance around the unit to provide good airflow.

⚠ WARNING

Hazardous Voltage w/Capacitors!

Failure to disconnect power and discharge capacitors before servicing could result in death or serious injury.

Disconnect all electric power, including remote disconnects and discharge all motor start/run capacitors before servicing. Follow proper lockout/tagout procedures to ensure the power cannot be inadvertently energized. For variable frequency drives or other energy storing components provided by Trane or others, refer to the appropriate manufacturer's literature for allowable waiting periods for discharge of capacitors. Verify with a CAT III or IV voltmeter rated per NFPA 70E that all capacitors have discharged.

1. Set the thermostat heating adjustment lever to the lowest setting.
2. Flip the selector switch **OFF**.
3. Turn off all electric power to the unit.

⚠ WARNING

Risk of Burn!

Failure to follow instructions could result in serious injury.

NEVER attempt to manually light the burner.

4. This unit is equipped with an ignition device which automatically lights the burners.
5. Remove the access panel that contains the following label:

Figure 99. Label

REMOVE THIS PANEL
TO GAIN ACCESS TO
THE GAS VALVE

6. Flip the **ON/OFF** switch **OFF**.

   Note: *Some valves require the knob to be pushed in slightly before turning.*

⚠ WARNING

Hazard of Explosion or Fire!

Failure to follow instructions could result in death or serious injury and equipment or property damage.

Do not store or use gasoline or other flammable vapors and liquids in the vicinity of this or any other appliance.

IF YOU SMELL GAS, follow instructions below:

- **Do not try to light any appliance.**
- **Do not touch any electrical switch.**
- **Do not use any phone in your building.**
- **Open windows and doors.**
- **Alert others and evacuate building immediately.**
- **From a phone outside of the building, immediately call your gas supplier. Follow the gas supplier's instructions. If you cannot reach your gas supplier, call the fire department.**

7. Wait (five) minutes to clear out any gas. If you then smell gas, **STOP** and proceed with the instructions as per above Warning. If you do not smell gas, go to the next step.
8. Change the **ON/OFF** switch **ON**.
9. Replace panel removed in Step 5.
10. Turn on all electric power to unit.
11. Set thermostat to desired temperature and flip the selector switch **ON**. The unit will operate automatically.
12. If the unit will not operate, follow the instructions in "Turning Off Gas to Unit," p. 90 and call the service technician or gas supplier.

Important: *The unit should be adjusted to obtain an air rise specified on the nameplate.*

Heating System Shutdown

To shut down the heating system for brief periods of time slip the thermostat selector switch to the **OFF**.

NOTICE

Property Damage!

Furnace failure could cause property damage, such as frozen water pipes.

If the unit is shut down during the cold weather months, provisions must be taken to prevent freeze-up of all water pipes and water receptacles. Whenever your house or building is to be vacant, arrange to have someone inspect your structure for proper temperature. This is very important in below-freezing weather.

NOTICE

Coil Freeze-Up!

Failure to follow instruction below could result in equipment damage.

Drain and vent coils when not in use. Trane recommends glycol protection in all possible freezing applications. Use a glycol approved for use with commercial cooling and heating systems and copper tube coils.

Turning Off Gas to Unit

1. Set the thermostat to lowest setting.

⚠ WARNING

Hazardous Voltage w/Capacitors!

Failure to disconnect power and discharge capacitors before servicing could result in death or serious injury.

Disconnect all electric power, including remote disconnects and discharge all motor start/run capacitors before servicing. Follow proper lockout/tagout procedures to ensure the power cannot be inadvertently energized. For variable frequency drives or other energy storing components provided by Trane or others, refer to the appropriate manufacturer's literature for allowable waiting periods for discharge of capacitors. Verify with a CAT III or IV voltmeter rated per NFPA 70E that all capacitors have discharged.

2. Turn off all electric power to the unit if service will be performed.
3. Remove the access panel that contains the label shown in Figure 99, p. 89.
4. Change the **ON/OFF** switch to the **OFF**.
5. Replace panel removed in Step 3.

Heating System Maintenance

⚠ WARNING

Hazard of Explosion or Fire!

Failure to follow instructions could result in death or serious injury and equipment or property damage.

Do not store or use gasoline or other flammable vapors and liquids in the vicinity of this or any other appliance.

IF YOU SMELL GAS, follow instructions below:

- **Do not try to light any appliance.**
- **Do not touch any electrical switch.**
- **Do not use any phone in your building.**
- **Open windows and doors.**
- **Alert others and evacuate building immediately.**
- **From a phone outside of the building, immediately call your gas supplier. Follow the gas supplier's instructions. If you cannot reach your gas supplier, call the fire department.**

Complete the following unit inspections and service routines at the beginning of each heating season.

Important: *These steps should only be performed by a qualified service technician.*

1. Inspect the control panel wiring and heating controls to confirm connections are tight and wiring insulation is intact.
2. Turn the unit on and off at the thermostat to be sure the ignition control and spark electrode are operating properly.
3. Turn off the gas supply with the unit operating to verify that the gas valve closes and that a re-ignition cycle is initiated by the ignition control.
4. Check the operation of the gas ignition system
5. Check the burner manifold pressure. A 1/8 inch pipe plug is provided in the gas valve for this purpose.
6. Visually inspect all of the unit's flue product passage ways for excessive deposit build up and corrosion. If build up or corrosion is apparent, perform the necessary repairs.
7. Arrange for a qualified serviceman to inspect the unit every other heating season to maintain safe and efficient operation.
8. Visually check the main burner flames. They should be bright blue flames extending into the heat exchanger sections.
9. Never store anything flammable or combustible around or near the unit.

Limited Warranty

Electric Air Conditioner

Precedent (Models TSK, THK, YSK, YHK)

This warranty is extended by Trane to the original purchaser and to any succeeding owner of the real property to which the Electric/ Electric Air Conditioner is originally affixed and applies to products purchased and retained for use within the U.S.A. and Canada. The company warrants for a period of 36 months from initial start-up or 42 months from date of shipment, whichever is less, that the company products covered by this order (1) are free from defects in material and workmanship and (2) have the capacities and ratings set forth in the company's catalogs and bulletins.

There is no warranty against corrosion, erosion or deterioration. If any part of your Electric/ Electric Air Conditioner fails because of a manufacturing defect within three years (36 months) from the date of the original purchase, warrantor will furnish without charge the required replacement part.

In addition, if the sealed motor-**compressor** fails because of a manufacturing defect within the fourth through fifth year from the date of original purchase, warrantor will furnish without charge the required replacement compressor.

Warrantor's obligations and liabilities under this warranty are limited to furnishing F.O.B. warrantor factory or warehouse at warrantor designated shipping point, freight allowed to buyer's city, replacement parts for warrantor's products covered under this warranty. Warrantor shall not be obligated to pay for the cost of lost refrigerant. No liability shall attach to warrantor until products have been paid for and then liability shall be limited solely to the purchase price of the equipment under warranty shown to be defective.

THE WARRANTY AND LIABILITY SET FORTH HEREIN ARE IN LIEU OF ALL OTHER WARRANTIES AND LIABILITIES, WHETHER IN CONTRACT OR IN NEGLIGENCE, EXPRESS OR IMPLIED, IN LAW OR IN FACT, INCLUDING IMPLIED WARRANTIES OF MERCHANTABILITY AND FITNESS FOR PARTICULAR USE, AND IN NO EVENT SHALL WARRANTOR BE LIABLE FOR ANY INCIDENTAL OR CONSEQUENTIAL DAMAGES.

Some states do not allow limitations on how long an implied warranty lasts or do not allow the exclusion or limitation of incidental or consequential damages, so the above limitation or exclusion may not apply to you. This warranty gives you specific legal rights, and you may also have other rights which vary from state to state.

Trane Technologies

2701 Wilma Rudolph Blvd.

Clarksville, TN 37040-1008

Attention: Manager, Product Service

GW-606-4800

The Company makes certain further warranty protection available on an optional extra-cost basis. Any further warranty must be in writing, signed by an officer of the company.

The warranty and liability set forth herein are in lieu of all other warranties and liabilities, whether in contract or in negligence, express or implied, in law or in fact, including implied warranties of merchantability and fitness for particular use. In no event shall the company be liable for any incidental or consequential damages.

* This warranty is for commercial usage of said equipment and not applicable when the equipment is used for a residential application. Commercial use is any application where the end purchaser uses the product for other than personal, family or household purposes.

**A five year limited warranty is provided for the optional "Low Leak" economizer.

Trane and American Standard create comfortable, energy efficient indoor environments for commercial and residential applications. For more information, please visit trane.com or americanstandardair.com.

Trane and American Standard have a policy of continuous product and product data improvement and reserve the right to change design and specifications without notice. We are committed to using environmentally conscious print practices.

RT-SVX092C-EN 28 Feb 2025
Supersedes RT-SVX092B-EN (December 2024)

©2025